International Journal of Chemical, Materials and Biomolecular Sciences
ISSN: 2415-6620
Vol:10, No:11, 2016

A Numerical Study on Micromechanical Aspects in Short Fiber Composites

I. Ioannou, I. M. Gitman

Abstract**—**This study focused on the contribution of micro-mechanical parameters on the macro-mechanical response of short fiber composites, namely polypropylene matrix reinforced by glass fibers. In the framework of this paper, an attention has been given to the glass fibers length, as micromechanical parameter influences the overall macroscopic material's behavior. Three dimensional numerical models were developed and analyzed through the concept of a Representative Volume Element (RVE). Results of the RVE-based approach were compared with analytical Halpin-Tsai's model.

Keywords**—**Effective properties, representative volume element, short fiber reinforced composites.

I. Introduction

INJECTION molded thermoplastic composite and compressed mold thermoset composite have been substituting traditional engineering materials in a range of structures and applications. This type of composite materials, classified as Short Fiber Reinforced Composites (SFRC) is mainly the material used for the aforementioned manufacturing methods. These materials exhibit numerous advantages as environmental resistance, lightweight structures and lower cost. As a consequence, the understanding of the capabilities of SFRC in structural or semi-structural application is crucial. In order to further examine the macro-behavior of SFRC, an investigation of the most influenced parameters is needed. As reported in [1], the mechanical behavior of SFRC is mainly dominated from the physical and geometrical characteristics of the matrix and the reinforcement. The main geometrical parameters of SFRC are fiber's length and fiber's orientation. Those parameters will dictate the mechanical behavior of the material under loading.

A range of research has been carried out regarding numerical simulations of SFRC. The majority approaches the problem of material characterization through an RVE perspective. The definition of an RVE varies depending on the approach perspective of the researcher. As reported by [2], an RVE is considered valid if it is chosen to be sufficiently large in comparison with the microstructural size. In other words, the ergodic hypothesis [3] implies that the heterogeneous material is assumed to be statistically homogeneous for large enough volume.

The influence of fiber's geometry has been studied by [4] regarding the elastic and thermo-elastic properties of SFRC. The author studies the contribution of fiber's length and the potential of replacing the fiber's length distribution with the appropriate mono-dispersed fiber's length. The researcher developed three-dimensional models with aligned fibers for $V_f = 15\%$ and 30%. In [5], they also analyzed the characterization of SFRC through an RVE approach. The size of RVE was chosen to be twice the inclusion's length and the volume fraction of the developed realizations was set to $V_f = 35.1\%$. Microstructure consisted of randomly oriented fibres with constant length and aspect ratio =20.

The size effect and the existence of an RVE on the elastic-hardening-softening region was studied by [6]. The authors developed two dimensional models consisting of circular inclusions and interface zone between inclusions and matrix. Models were developed for three cases of volume fraction; $V_f = 30\%, 45\%, 60\%$. A gradient damage model was used in order to evaluate the material's behavior on the hardening and softening regime. The existence of an RVE was examined through a statistical test for each of the three regimes. They underlined the lack of RVE existence on the softening regime.

Various computational aspects for characterizing SFRC are discussed by [7] and [8]. They emphasize the importance of numerical simulation of SFRC due to the ability of numerical models to imitate the microstructure of SFRC. They use a modified RSA algorithm to create three dimensional random structures. In order to overcome the jamming problem and reach higher volume fractions, the authors developed a technique to place fibers in hierarchical manner based on the value of AR for each fiber.

Geometrical parameters as fiber's length and orientation were studied by [9]. The author developed two dimensional realizations of random, aligned and misaligned fibers. A developed algorithm was able to solve a two dimensional packing problem with $V_f = 30\%$. The behaviour of mechanical properties of the composite material were discussed as a function of fibres orientation and fibres length.

I. Ioannou is with The University of Sheffield, Department of Mechanical Engineering, United Kingdom (phone: +44 (0) 114 222 7700; fax: +44 (0) 114 222 7890; e-mail: I.ioannou@Sheffield.ac.uk).
I. M. Gitman is with The University of Sheffield, Department of Mechanical Engineering (e-mail: i.gitman@Sheffield.ac.uk).

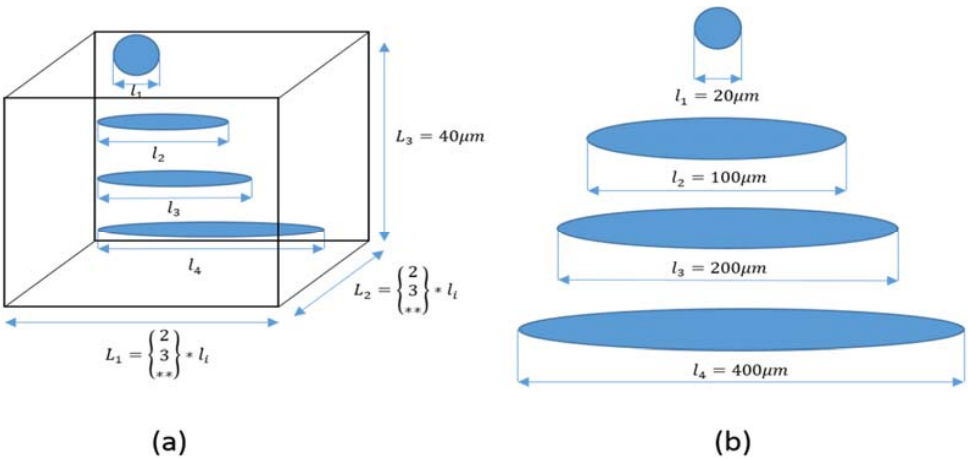

Fig. 1 (a) The size of inclusions in respect with the size of the matrix (b) the dimensions of the inclusions used during simulation: Double star (**) indicate larger sizes

Several analytical models have been developed for characterizing SFRC. On the following paragraphs, predictions of Halpin-Tsai's model will be compared with numerical simulations. Halpin-Tsai model as reported in [10] is a semi empirical model with the ability to consider parameters as fibre's length, AR and degree of inhomogeneity. Predictions of Halpin-Tsai models show good agreement with experimental results [11].

Building on our previous study [9], this study aims to further explore the topic for three dimensional models and study the analytical and numerical predictions as a function of the degree of inhomogeneity. The geometric parameter under investigation during the following study is fiber's length. Through this study, an emphasis is given on the microstructure geometric model, the computational predictions of SFRC, the representative size in respect to the inclusion's length.

II. Methodology

Through the following section, the general methodology used to define the elastic response of SFRC will be described. As mentioned above, the generic approach to characterize SFRC is based on the concept of a RVE. An RVE can be defined as "a sample that firstly is structurally entirely typical of the whole mixture on average and secondly, contains a sufficient number of inclusions for the apparent overall moduli to be effectively independent of the surface values of traction and displacement, so long as these values are *macroscopically uniform*" [12]. A detailed determination of an RVE is out of the scope of the paper. Further material can be found in [4].

A. Models Set-Up

Before continuing any further on the methodology, it will be useful to comment on the normalization of dimensions, used in the analysis. Through the following analysis, four types of fibers were considered, differing by an aspect ratio: 1, 5, 10 and 20, see Fig. 1 (a). During the analysis, the minor semi-axes of the prolate ellipsoid remained the same for all aspect ratios. As a consequence, the lengths of fibers were increasing in order to reach higher aspect ratio. Sizes of unit cells were based on the larger dimensions of ellipsoids. Thus for the four considered cases of different aspect ratios, four larger dimensions were: $AR = 1 \Rightarrow l_1 = 20\mu m, AR = 5 \Rightarrow l_2 = 100\mu m, AR = 10 \Rightarrow l_3 = 200\mu m, AR = 20 \Rightarrow l_4 = 400\mu m$, see Fig. 1 (b). The aspect ratio was defined as the ratio between the major semi-axis and the minor semi-axis. Properties of the constituent materials can be seen in Table I.

TABLE I
Mechanical Properties of the Constituent Material.

Material Properties	Glass Fibres	Polypropylene
Young Modulus	70.0 GPa	3.0 GPa
Poisson Ratio	0.3	0.3
Volume fraction	0.1	0.9

Mechanical properties under investigation are the Young moduli in all the three directions alongside with the Poisson ratios. The methodology used to answer the aforementioned question is listed as:

1. Estimate an initial size of a unit cell representing the microstructure with initially chosen micro-parameters
2. Create the microstructure-unit cell geometrically representing a SFRC
3. Within the unit cell, solve the boundary-value problem
4. Perform homogenization
5. Perform a statistical analysis to make a decision about representativeness of the structure
6. If step 5 is not satisfied return to step 1.

The process is repeated until the representative size is achieved. Through the following paragraphs the aforementioned steps will be further explained.

B. Creation of the Microstructure

All microstructures were created in an in-house build packing algorithm. The packing algorithm was developed in a MATLAB environment and was capable of placing elliptical object in space randomly following a uniform distribution. Note that, this algorithm is also able to create 3D ellipses with random size and random orientation, and place them in a

geometrically periodic manner along the borders of the container. The developed algorithm was based on a previous established methodology for solving 2D packing problem (see [9]). A particular challenging aspect in the modification of the methodology to the class of 3D problems was the time demands, required to create a structure and the capability of the algorithm to cater for high volume fraction of fibers. Aspect ratios under investigation were bounded between 1 and 20. The packing algorithm was created in MATLAB environment and the finite element analysis took place in ABAQUS 6.13. The geometric link between MATLAB and ABAQUS was established through PYTHON scripting. The developed models for various aspect ratio can be seen in Fig. 2. Models were meshed with (C3D10) 3D stress tetrahedral elements in a quadratic geometric order, mainly due to the complexity of the meshed volumes. Through the developed models fibers were simulated as 3D prolate ellipsoid. The interface between fibers and matrix assumed to be perfect with zero thickness as the elliptical domain was established as volume partition. The developed micro-structure experience geometrical periodicity. Geometrical periodicity is understood as the ability of a fiber once it exits the bounds of the matrix-volume to *re-appear* on the opposite side-surface.

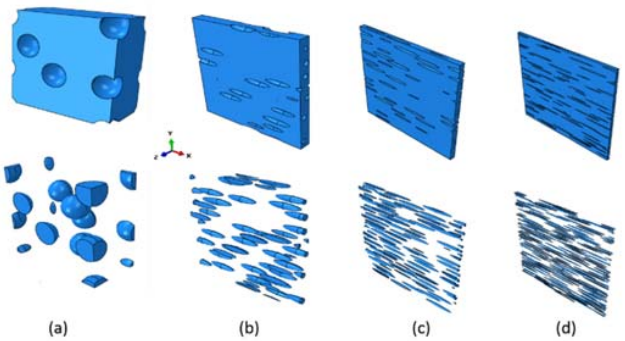

Fig. 2 The developed micro-structures, matrices on the top and reinforcement on the bottom. (a) AR=1, (b) AR=5, (c) AR=10, (d) AR=20

C. The Boundary Value Problem

In order to derive the mechanical properties of the SFRC material, the volume under consideration needs to be exposed in as average strain ($\bar{\varepsilon}$). A set of displacement boundary conditions needs to be applied on the volume in order to ensure the six components of strain (ε_{ij}). The following set of equations (1)-(3) describes the applied displacement field on the boundary of the RVE.

$$u_i(L_1, y, z) - u_i(-L_1, y, z) = L_1\varepsilon_{i1} \quad (1)$$

$$u_i(x, L_2, z) - u_i(x, -L_2, z) = L_2\varepsilon_{i2} \quad (2)$$

$$u_i(x, y, L_3) - u_i(x, y, -L_3) = L_3\varepsilon_{i3} \quad (3)$$

where u_i represents displacement on the i direction applied on the (x, y, z) surface, ε_{i1} represents the applied strain on the surface vertical to '1st, 2nd and 3rd axis'.

Three different loading scenarios were considered in this paper, corresponding to three different sets of boundary conditions. For each loading case, only one strain elements was non-zero. As a consequence, the combination of three loading cases can provide solutions for the stiffness matrix. With the assumption of material's orthotropic behavior, the necessary elements of the stiffness matrix to calculate are reducing to four namely $[C_{11}, C_{22}, C_{12}, C_{23}]$.

D. Homogenisation Scheme

The effective properties of the composite material were derived through the homogenization process, see (4), (5):

$$\langle\bar{\boldsymbol{\sigma}}\rangle = \frac{1}{V}\int_V \sigma_{ij}dV \quad \langle\bar{\boldsymbol{\varepsilon}}\rangle = \frac{1}{V}\int_V \varepsilon_{ij}dV \quad (4)$$

$$\langle\bar{\boldsymbol{\sigma}}\rangle = \mathbf{C}\langle\bar{\boldsymbol{\varepsilon}}\rangle \quad (5)$$

where σ_{ij} and ε_{ij} represent values of stress and strain in every integration point of every element, $\langle\bar{\boldsymbol{\sigma}}\rangle$ and $\langle\bar{\boldsymbol{\varepsilon}}\rangle$ are the averaged on the unit cell stress and strain. For a homogenized composite material the relationship between stress and strain is defined through (5).

E. Statistical Analysis

The developed models consist of uniaxial aligned randomly distributed short fibers. For each out of four aspect ratios, three different sizes of unit cells were examined for its representativeness. Five statistically different realizations of microstructures were created and exposed on the aforementioned boundary conditions. The representativeness of each size was examined through the chi-square goodness of fit test (assuming the accuracy of 97.5%, the chosen five realizations resulted in the number of degrees of freedom = 3). All geometric aspects have been normalized as shown in Model set-up section, and all the quantities included in the chi-square test were normalized in order to ensure dimensionless results.

III. Results and Discussion

In order to further examine the representativeness of the sizes under investigation, an effective property derived from the homogenization scheme need to be considered. Through the homogenization process, local measurements of stress and strain have been averaged and the effective stiffness matrix as expressed in (5), was constructed. With the assumption of an orthotropic material we concluded in the expression of Young's modulus, shear modulus and Poisson ratios. Those effective macroscopic properties are the values obtained in unit cells that passed the chi-square test. As an example, a longitudinal effective (E_1) is presented in Table II with the corresponding values of chi-square tests for the four considered cases of aspect ratios.

Analyzing the results presented in Table II and comparing them with tests for other effective properties, some conclusions can be made: (i) from all the effective properties, (E_1) is the

most sensitive on the aspect ratio changes; (ii) as long as the aspect ratio increases, the chi-square value of the longitudinal effective stiffness (E_1) increases as well; (iii) for spherical inclusions, the property with the most variation seems to be shear modulus especially for the smallest size under examination. In the case of spherical inclusions (AR=1), the material shows a quasi-isotropic behavior due to the geometric nature of spheres.

Following the above discussion, the proposed RVE sizes for different aspect ratios can be summarized in Table III.

TABLE II
CHI SQUARE TEST RESULTS

Unit cell Size	AR=1	AR=5	AR=10	AR=20
$2*l$	0.020165693	0.184149768	0.680557178	0.765159996
$3*l$	0.04225132	0.116629802	0.112509139	0.206593198
$\chi^2(97.5\%) = 0.216$				

Results of Table III show that, for the small aspect ratio (AR=1, 5), the representative size is twice the length of the inclusion while for the larger aspect ratio (AR=10, 20) the representative size is triple the length of the inclusion. Results are in a very good agreement with results presented from [13] and [14].

TABLE III
REPRESENTATIVE SIZES ACCORDING TO CHI SQUARE TEST

	Representative Size
AR=1	$2l$
AR=5	$2l$
AR=10	$3l$
AR=20	$3l$

A. Analytical Models

In order to compare numerical results, an analytical model was considered, namely Halpin-Tsai model. Halpin-Tsai equations were considered in order to account for fiber's discontinuity. Parameters of Halpin-Tsai are given through (6), (7):

$$E_i = \left[\frac{1+\xi_i\eta_i V_f}{1-\eta_i V_f}\right] \qquad \eta_i = \frac{\left(E_f/E_m\right)-1}{\left(E_f/E_m\right)+\xi_i} \tag{6}$$

$$\xi_1 = \frac{2l}{D} \qquad \xi_2 = 2 \qquad \xi_G = 1 \tag{7}$$

where E_i are the values of stiffness in three directions ($i = \overline{1,3}$); η_i is a model parameter depending on the degree of inhomogeneity and the geometrical parameters ξ_i, which takes different value according to the property under investigation; l and D are the length and the diameter of the fibers.

B. Computational Model Results

Bringing together all *representative* numerical results, i.e. effective properties obtained on the representative unit cells (RVE) alongside with the results obtained through analytical Halpin-Tsai model, some conclusions can be made (see Fig. 3): stiffness linearly increases with respect to the increase of the aspect ratio. In the same time, transverse stiffness remains almost unaffected by the aspect ratio increase. The same trend was observed for shear modulus. Halpin-Tsai model and numerical simulations seems to have very close predictions (see Fig. 3).

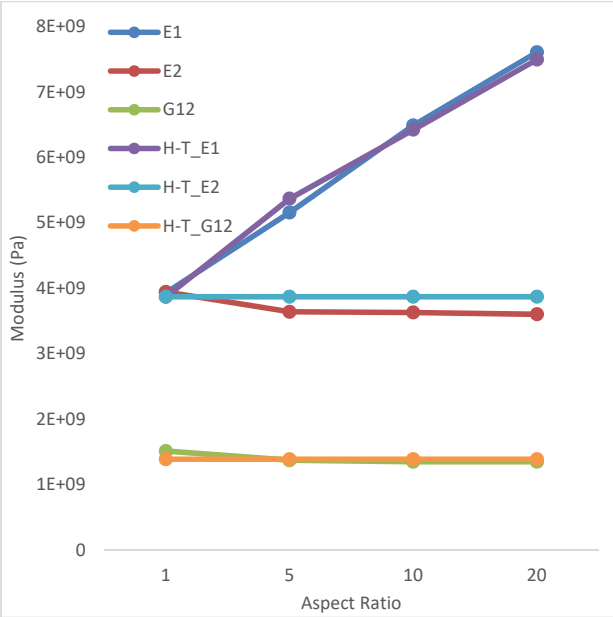

Fig. 3. Comparison between numerical results and analytical predictions

IV. CONCLUSIONS

In this study, a three dimensional micro-structure of SFRC was created and analyzed through FE method. The developed microstructures consist of aligned discontinuous fibers with aspect ratio between 1 and 20. Effective mechanical properties were derived for the developed microstructures through the homogenization scheme, and compared with analytical predictions. The representativeness of the size was tested through a chi-square goodness of fit test and found to have a linear relation with aspect ratio. Results show that 3D models were fully capable of capturing the dependence of effective stiffness from the aspect ratio of glass fibers and also the independency of aspect ratio on E_2 and G_{12}. Challenges faced during the 3D analysis, such as packing issues, time and computation expenses were discussed. Overall, the presented 3D numerical algorithm is a good reliable tool to analyze materials behavior of complex 3D composite microstructures because it can fully record the mechanism that take place during a loading condition of a composite material. Furthermore, three dimensional representations can provide a better understanding on the interaction between fiber's stress fields within the composite. Future work include implementation of fiber length distribution, fiber orientation distribution and interphase zone between fiber and matrix.

REFERENCES

[1] Fu, Shao-Yun, Bernd Lauke, and Y-W. Mai. Science and engineering of short fibre reinforced polymer composites. Elsevier, 2009.

[2] Drugan, W. J., and J. R. Willis. "A micromechanics-based nonlocal constitutive equation and estimates of representative volume element size for elastic composites." Journal of the Mechanics and Physics of Solids 44, no. 4 (1996): 497-524
[3] Ostoja-Starzewski, Martin. "Material spatial randomness: From statistical to representative volume element." Probabilistic Engineering Mechanics 21, no. 2 (2006): 112-132.
[4] Hine, Peter J., Hans Rudolf Lusti, and Andrei A. Gusev. "Numerical simulation of the effects of volume fraction, aspect ratio and fibre length distribution on the elastic and thermoelastic properties of short fibre composites." Composites science and technology 62, no. 10 (2002): 1445-1453.
[5] Pan, Yi, Lucian Iorga, and Assimina A. Pelegri. "Numerical generation of a random chopped fiber composite RVE and its elastic properties." Composites Science and Technology 68, no. 13 (2008): 2792-2798.
[6] Bennett, Terry, Inna M. Gitman, and Harm Askes. "Elasticity theories with higher-order gradients of inertia and stiffness for the modelling of wave dispersion in laminates." International Journal of Fracture 148, no. 2 (2007): 185-193.
[7] Kari, S., H. Berger, and U. Gabbert. "Numerical evaluation of effective material properties of randomly distributed short cylindrical fibre composites." Computational Materials Science 39, no. 1 (2007): 198-204.
[8] Berger, Harald, Sreedhar Kari, Ulrich Gabbert, Reinaldo Rodríguez Ramos, Julian Bravo Castillero, and Raúl Guinovart Díaz. "Evaluation of effective material properties of randomly distributed short cylindrical fiber composites using a numerical homogenization technique." Journal of mechanics of materials and structures 2, no. 8 (2007): 1561-1570.
[9] Ioannis, Ioannou, Hodzic Alma, Gitman Inna, Soutis Costas, and M. A. Almaadeed. "Micro-Mechanical Parameters in Short Fibre Composite." Applied Composite Materials 21, no. 1 (2014): 197-211.
[10] Affdl, J. C., and J. L. Kardos. "The Halpin-Tsai equations: a review." Polymer Engineering & Science 16, no. 5 (1976): 344-352.
[11] Thomason, J. L. "The influence of fibre length and concentration on the properties of glass fibre reinforced polypropylene. 6. The properties of injection moulded long fibre PP at high fibre content." Composites Part A: Applied Science and Manufacturing 36, no. 7 (2005): 995-1003.
[12] Hill, Rodney. "Elastic properties of reinforced solids: some theoretical principles." Journal of the Mechanics and Physics of Solids 11, no. 5 (1963): 357-372.
[13] Van Mier, J.G., 1996. Fracture processes of concrete (Vol. 12). CRC press.
[14] Van Vliet, M.R.A., 2000. Size effect in tensile fracture of concrete and rock. TU Delft, Delft University of Technology.