International Journal of Chemical, Materials and Biomolecular Sciences
ISSN: 2415-6620
Vol:5, No:1, 2011

Exergy Analysis of Combined Cycle of Air Separation and Natural Gas Liquefaction

Hanfei Tuo, Yanzhong Li

Abstract**—**This paper presented a novel combined cycle of air separation and natural gas liquefaction. The idea is that natural gas can be liquefied, meanwhile gaseous or liquid nitrogen and oxygen are produced in one combined cryogenic system. Cycle simulation and exergy analysis were performed to evaluate the process and thereby reveal the influence of the crucial parameter, i.e., flow rate ratio through two stages expanders β on heat transfer temperature difference, its distribution and consequent exergy loss. Composite curves for the combined hot streams (feeding natural gas and recycled nitrogen) and the cold stream showed the degree of optimization available in this process if appropriate β was designed. The results indicated that increasing β reduces temperature difference and exergy loss in heat exchange process. However, the maximum limit value of β should be confined in terms of minimum temperature difference proposed in heat exchanger design standard and heat exchanger size. The optimal β_{opt} under different operation conditions corresponding to the required minimum temperature differences was investigated.

Keywords**—**combined cycle simulation, exergy analysis, natural gas liquefaction.

I. Introduction

SINCE liquefied natural gas (LNG) has considerably high energy density per unit volume, transport and storage by liquefaction of natural gas has already been the most preferred method. Currently, cryogenic liquefaction equipment is widely used in natural gas liquefaction process for peak-shaving plants and offshore transportation. Particular attention is recently drawn to development of a small skid-mounted LNG system. Due to its relatively compact size and flexible operation, its applications include conversion of solution gas and/or gas-cap gas from remote marginal oil or condensate fields into a saleable product, but also handling mismatch between supply and demand near dense consumer zones by liquefying and consequently storing excess natural gas during periods of low demand and vaporizing it at peak times.

Several typical liquefaction cycles for LNG are described in various publications. Finn, A.J. et al. [1] made an overview with references to developments in natural gas liquefaction. He stated that the most used cycle is the mixed refrigerant cycle with propane precooling where a multi-component mixture of hydrocarbons (typically propane, ethane, methane, and/ or nitrogen) perform the final cooling of natural gas while a separate propane cycle perform the precooling of natural gas and mixed refrigerant. However, more know-how in the areas of two-phase flow and refrigerant composition management, heat exchanger design, and process control is required for such mixed refrigerant cycle [2].

In addition, C. W. Remeljej et al. [3] evaluated four processes for small-scale LNG production, including a single-stage mixed refrigerant (SMR), a two-stage expander nitrogen refrigerant and two open-loop expander processes. A more general comparison suggested that the nitrogen refrigerant process and the new LNG open-loop process were the leading candidates for offshore compact LNG production.

Compared with LNG liquefaction, well-developed and reliable technology is available in air separation and liquefaction process by cryogenic distillation, characterized by large-scale production, low power consumption per unit liquid and multiple productions with high purity [4]. Given that liquefaction temperature of natural gas is higher than that of air at the same pressure, it is possible to use original refrigeration unit in air separation process for both air separation and liquefaction of natural gas, where energy synthetic utilization and high efficiency of cryogenic devices could be achieved. Based on such concept, several novel combined-cycles were proposed to use nitrogen expansion refrigeration unit in air separation process, yielding both LNG and nitrogen and oxygen [5]. Such combined cycles would benefit from the following advantages as compared to the cascade or mixed refrigerant cycle which has been used in the base-load or peaking-shaving plants: temperature control is much easier when a gas is expanded, start-up/shut-down of the plant is simpler; tolerance to variation in composition of the feed is higher; storage of the refrigeration fluids in the cascade cycle or the various components of the mixed refrigerant in order to fill the circuits prior to start-up or to compensate for losses during operation is not anymore required; multiple production would be obtained at the same cryogenic system, including LNG and gaseous or liquid production of nitrogen and oxygen. All of these merits demonstrate that combined cycle has promising development and application.

The objective of this paper therefore is to present a possible combined cycle, and then cycle simulation and exergy analysis on this cycle are conducted to reveal influence of key parameters on system performance, heat exchange process, and exergy loss.

Hanfei Tuo is with University of Illinois Urbana Champaign.(e-mail:tuo1@illinois.edu)

NOMENCLATURES			
$E_{e,Q}$	cold exergy	w	power consumption per liquid yield
p	pressure	Ω	modified Carnot factor
Q	heat flow	η_{ex}	exergy efficiency of heat exchanger
δq	heat flow in finite element		
T	temperature		Subscripts
ΔT	temperature difference	C	cold stream
$V_{NG,,}$	natural gas flow rate	H	hot stream
Ve_1	flow rate of nitrogen through high temperature expander	m	integral-average
Ve_2	flow rate of nitrogen through low temperature expander	max	maximum value
ΔW_{ex}	available work loss	min	minimum value
		0	ambient condition

II. Combined air separation and natural gas liquefaction cycle

According to various refrigeration methods, combined cycle of air separation and natural gas liquefaction can be classified into nitrogen expansion cycle and air expansion cycle, respectively. The former was firstly presented in the patent [5], while Jean-Pierre et al. [6] invented the latter liquefaction processes using cycle air expansion refrigeration and direct air expansion respectively.

A. *Direct air expansion (DAE) cycle*

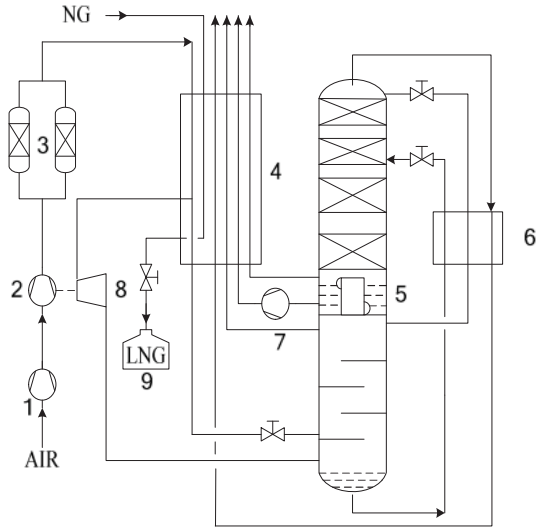

Fig.1 Direct air expansion flow sheet

1. Air compressor 2. Booster 3. Purifier 4. Main heat exchanger 5. Distillation column 6. Sub-cooler 7. Liquid oxygen pump 8. Air expansion turbine 9. LNG storage

The original DAE flow sheet is depicted in Fig. 1. Feed air is compressed in the air compressor and booster to a pressure of 2.15 MPa, and impurities are removed in the purifier. Feed air is then cooled and split into two streams. The one is further cooled down and introduced into low column of the cryogenic air separation unit and the other is expanded to 0.56 MPa. In this scheme, the work recovered from the expansion turbine is used to drive air booster. A pre-treated natural gas at a feed pressure of 6.0 MPa and a temperature close to ambient is introduced into warm end of the main heat exchanger, cooled against cold refrigerant to the target temperature of around 108 K and then sent to the storage. The DAE process is the simplest of the presented three processes, but the amount of expanded air is restricted by feed air, in which case refrigeration capacity used for liquefying natural gas is limited. The possibility of contact and mix between flammable natural gas and rewarmed oxygen in main heat exchanger could bring about system safety issues.

B. *Recycle air expansion (RAE) cycle*

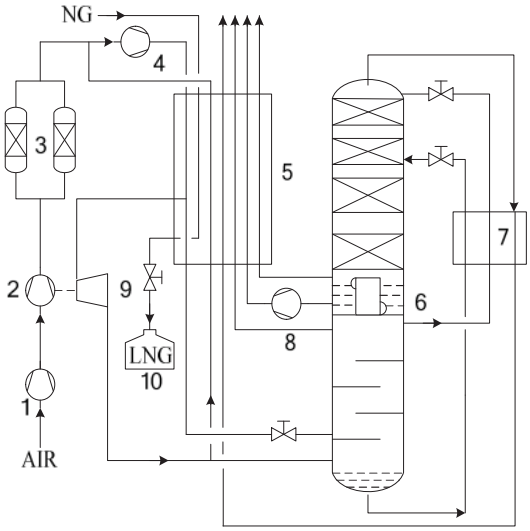

Fig. 2 Recycled air expansion flow sheet
1. Air compressor 2. Booster 3. Purifier 4. Recycle compressor
5. Main heat exchanger 6. Distillation column 7. Sub-cooler
8. Liquid oxygen pump 9. Air expansion turbine 10. LNG storage

RAE cycle is shown in Fig. 2, quite similar to DAE cycle. The only difference is that certain amount of recycled air is used to provide the cooling capacity. Thus, the cooling capacity and liquid production are not confined by the amount of feed air, and such system is able to operate varied-load mode. However, high cycle pressure of feed air leads to considerably high power consumption for air compressor and higher design requirement for main heat exchanger as well as pipeline. Besides, the potential safety issue still exists due to natural gas possibly contaminated by rewarmed oxygen.

C. *Recycle nitrogen expansion (RNE) process*

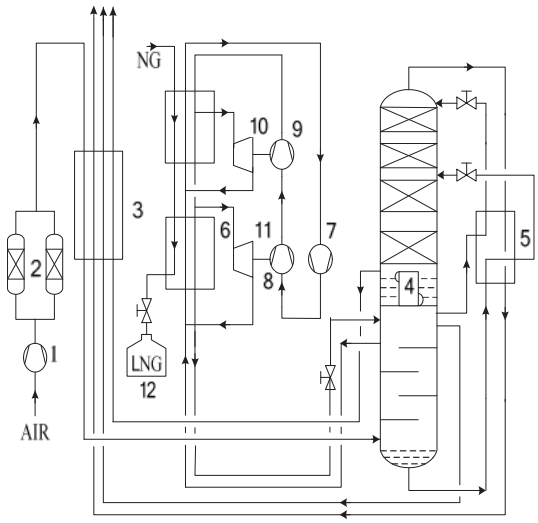

Fig. 3 Recycled nitrogen expansion flow sheet
1. Air compressor 2.Purifier 3. Main heat exchanger
4. Distillation column 5. Sub-cooler 6. LNG heat exchanger
7. Recycle compressor 8. 9. Boosters 10. 11. Expansion turbines
12. LNG storage

In order to overcome the problems in DAE and RAE cycles, this paper presented a novel combined cycle using recycle nitrogen refrigeration unit is proposed as shown in fig. 3. The nitrogen from low column of air separation unit is compressed and expanded in two-stage turbines, and generated cooling capacity is used to liquefy natural gas. A portion of low temperature nitrogen returns back to low column to provide cold energy for air separation unit. Since cold energy for this combined system only relies on recycle nitrogen, this cycle can have good operation performance under varied liquefaction load and large multiple production, such as LNG, liquid nitrogen and oxygen. Moreover, this process also claims two other advantages over CAE process. First, the heat transfer process and the equipment are easier to model and design with the reduced maximum operation pressure. Secondly, this process is safer since the natural gas is in LNG heat exchangers only with inert gas, i.e., nitrogen.

III. THEORETICAL ANALYSIS

A. *Exergy analysis*

Exergy is a measure of the maximum amount of useful energy that can be extracted from a process stream when it is brought to equilibrium with its surroundings in a hypothetical reversible process [7]. It is thermodynamically defined only in terms of stream enthalpy, *H*, and entropy, *S*, for the given stream conditions relative to the surroundings. For a steady-state system, the kinetic and potential energy effects are ignored. The exergy, *Ex*, or useful available work, of a stream is therefore expressed as

$$Ex = (H - T_0 S)_{T,P} - (H - T_0 S)_{T_0,P_0} \quad (1)$$

Where T_0, P_0 are the equilibrium temperature and pressure, normally considered as the ambient conditions. When stream is taken from one state to another via a hypothetical reversible process, the change is given by

$$\Delta Ex = (H - T_0 S)_{state2} - (H - T_0 S)_{state1} \quad (2)$$

This change in exergy represents the minimum amount of work to be added or removed to change from state 1 to state 2.

B. *Shaft work targeting analysis*

Pinch analysis has become a general methodology for targeting and design of thermal and chemical processes and associated utilities. The composite curves (CC) and the grand composite curves (GCC) are two basic tools in pinch analysis, and they are constructed using temperature versus enthalpy axes [8]. Many studies regarding to applications with this methodologies and its modification have been reported [9-11].

Heat load composite curve in a low temperature process at a constant pressure is shown in Fig. 4(a), where T_H and T_C

represent the hot stream and the cold stream temperature respectively, and Q is total heat load. The relationship between the temperature and heat load during heat transfer process is described in this composite curve, where maximum, minimum and integral-averaged temperature difference can be obtained. This mean temperature difference along with heat transfer process can be defined by

$$\Delta T_m = \frac{\int_0^Q \delta q_H \cdot T_H - \int_0^Q \delta q_L \cdot T_L}{\int_0^Q \delta q} \tag{3}$$

According to heat transfer balance in a given differential unit

$$\delta q_L = \delta q_H = \delta q \tag{4}$$

substituting equation (4) into (3) yields

$$\Delta T_m = \frac{\int_0^Q \delta q \cdot (T_H - T_L)}{\int_0^Q \delta q} \tag{5}$$

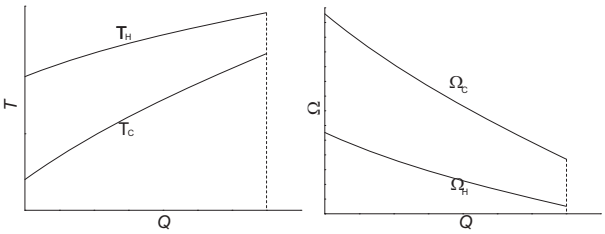

(a). (a).

Fig. 4 Heat load curve and exergy composite curve

For a stream whose thermodynamic state is described by temperature T and pressure P, its temperature-based exergy is defined as the maximum obtainable work when the stream is brought from its current temperature T to ambient temperature T_0 at constant pressure P. When stream temperature T is lower than ambient temperature T_0, such exergy is also named cold exergy which can be written by

$$E_{x,Q} = \int_0^Q \delta q \cdot (T_0 / T - 1) \tag{6}$$

Furthermore, modified Carnot factor Ω is defined by

$$\Omega = T_0 / T - 1$$

Then Equation (6) can be expressed as

$$E_{x,Q} = \int_0^Q \delta q \cdot \Omega \tag{7}$$

Therefore, for heat engine and heat pump processes driven by temperature change, the reversible shaft work can be calculated from the heat load Q and the modified Carnot factor Ω. Linnhoff and Dhole [12] showed that this could be incorporated into composite curve analysis by plotting the composite curves on a modified Carnot factor rather than temperature basis against heat load. Then, heat load composite curve in Fig. 4(a) can be plotted again into exergy composite curve depicted in Fig. 4(b). Irreversibility or available work losses in heat transfer process with heat load Q can be expressed as

$$\Delta W_{ex} = \int_0^Q \delta q_L \cdot (T_0 / T_L - 1) - \int_0^Q \delta q_H \cdot (T_0 / T_H - 1) \tag{8}$$

Substituting Equations (4) and (7) into Equation (8) yields

$$\Delta W_{ex} = \int_0^Q \delta q (\Omega_C - \Omega_H) \tag{9}$$

Consequently, for heat exchange process it is possible to estimate the minimum shaft work by comparing the composite hot and cold streams, since the area between these two curves equates to the minimum driving force for heat exchange and also the lost work in the heat exchange network. Knowing this target value significantly aids the process optimization problem by providing an ultimate goal with which possible process improvements can be compared. Thus, the shaft work targeting method is employed in this study to evaluate the temperature driving force losses associated with the LNG heat exchange and determine the optimal parameters in combined cycle for further improvement.

IV. Results and Discussion

In the case of RNE cycle, system performance is affected by some important parameters, especially the expander inlet pressure P, temperature T, and the volumetric flow rate of expanded nitrogen Ve. Since nitrogen expansion refrigeration provides the cold energy for both liquefying natural gas and cryogenic distillation process in air separation unit, the flow rate ratio of two stages of expanders $\beta = Ve_1/Ve_2$ should appropriately be specified to distribute cold energy for both high-temperature and low-temperature regions. Proper design of β is the basis of process optimization. Cycle simulation under different operation conditions was conducted by the flow sheeting program ASPEN PLUS, and then second law analysis was performed to reveal influence of β on heat exchange process. The processing conditions are summarized in Table 1.

Table I
Feed and Ambient Conditions and Other Assumptions

Property	Condition		Comments
Air	Feed temperature	25 ℃	N_2-O_2 Mixture (mol)
	Feed pressure	0.101 MPa	N_2/O_2 : 0.791/0.209
Natural gas	Feed temperature	27 ℃	CH_4 1.0 (pre-treated)
	Feed pressure	6.0 MPa	
Ambient temperature		20 ℃	
Air compressor polytropic efficiency		80%	Two-stage air compressor
Expansion turbine	isentropic efficiency	80%	
	Mechanical efficiency	90%	

Production	LNG	1000 Nm^3/h
	Nitrogen	720 Nm^3/h
	Oxygen	200 Nm^3/h

A. *The effect of β on heat load and power consumption*

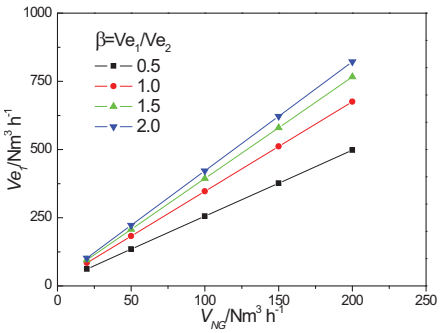

(a) Flow rate at 1st stage expansion turbine Ve_1

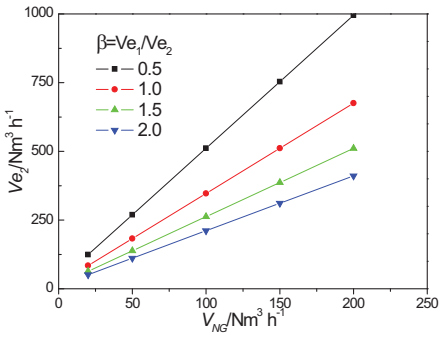

(b) Flow rate at 2nd stage expansion turbine Ve_2.

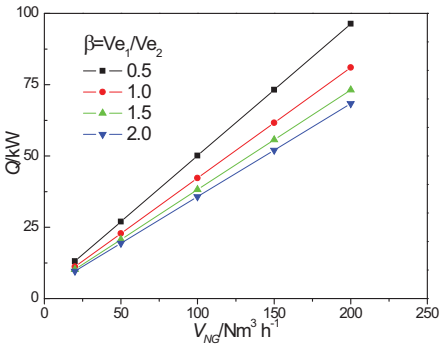

(c) Heat load at LNG heat exchangers

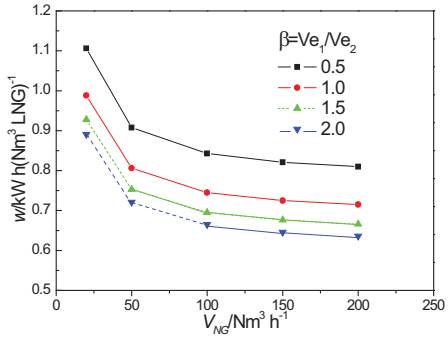

(d) Power consumption per liquid product

Fig. 5. Effect of β on combined cycle performance

Figs. 5(a-d) illustrate the effects of β on heat load and power consumption per unit LNG production at varied natural gas (NG) flow rate. For fixed β the quantity of expanded nitrogen and total heat load in LNG heat exchangers rise approximately linearly with increasing V_{NG}. However, referring to Figs. 5(c) and 5(d), we observe that at certain V_{NG} the total heat load and power consumption decreases as β increases, which can be explained that more cold energy can be produced by unit cycle nitrogen expanded at higher temperature. Increasing β for more cycle nitrogen expanded at hot expander can decrease the total quantity of cycle nitrogen and the compression power can be reduced.

B. *The influences of β on heat exchange process*

The case of V_{NG}=100 Nm^3/h was calculated in detail to examine the effect of β on the heat exchange process. Figs. 6(a-d) depict the composite curves for each β value plotted both as modified Carnot factor and temperature versus heat load, where the influence of β on the heat transfer process was revealed. In the composite curve diagram, the heat load gives the amount of heat to be removed, while the modified Carnot factor gives an indication of the degree of difficulty of this heat removal, i.e., requiring more available work. The different slopes of the curves represent the different heat capacity flow rates associated with the self-cooling duty of the recycle and refrigerant streams within the process that is additional to the feed natural gas-cooling duty. The kinks in the curves represent the intermediate pressure level between the two stages of the nitrogen cycle where only part of the refrigerant flow is required in the colder stage.

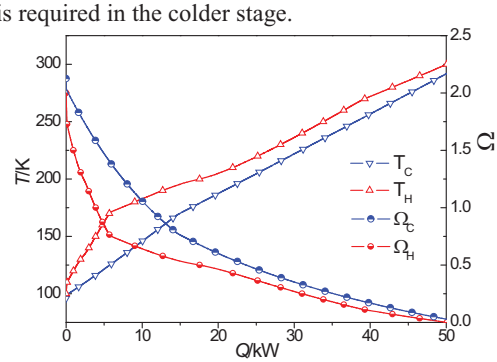

(a) β=0.5

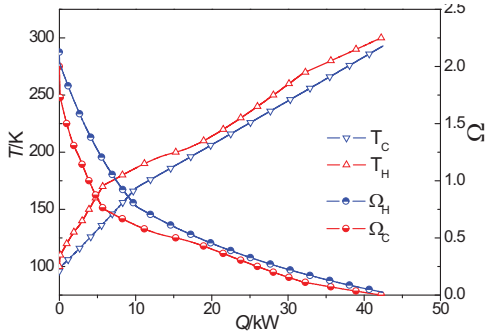

(b) β=1.0

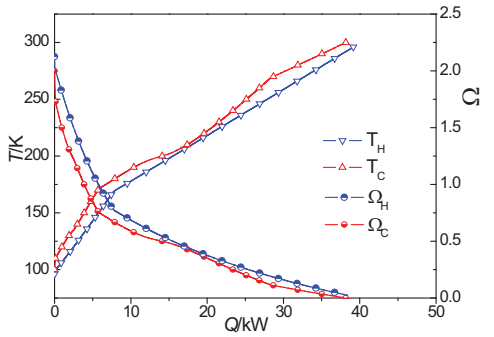

(c) β=1.5

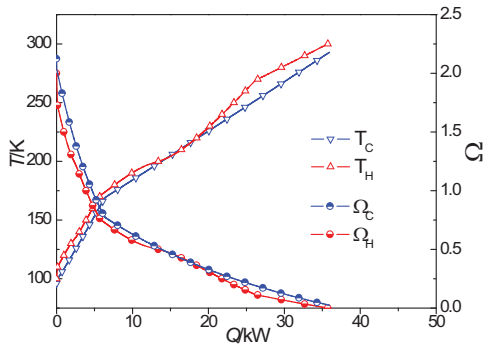

(d) β=2.0

Fig. 6. Effects of β on heat-exchange process

As β increases, the total required cycle nitrogen decreases and the heat load in LNG heat exchangers falls from 50 kW to 35 kW. Besides, increasing β also leads to a decrease in the heat transfer difference between hot and cold streams. As seen from in Fig. 7, when β increases from 0.5 to 2.0, $\Delta T_{\max}$ and ΔT_{m} are reduced from 48 K to 17 K and from 20 K to 9 K, respectively. Furthermore, the temperature difference distribution in the flow direction tends to be uniform, which is beneficial to heat exchanger design.

The ability to match the hot and cold composite curves presented in Figs. 6(a-d) suggests the degree of optimization with different β values. The area between the hot and cold exergy composite curves for each process is directly proportional to the exergy loss over LNG heat exchangers according to Equations (8) and (9). Obviously, the irreversibility or exergy loss is reduced with β increasing, which is shown in Fig. 8 that the exergy loss decreases from 9.87 kW to 2.17 kW and thereby exergy efficiency increases from 68.2% to 88.1%. These results indicate that an increment of β could give better match between cold and hot streams. However, the trade-off for a decrease in lost work over LNG heat exchangers is increased area and hence equipment cost.

C. *The optimal β under different operation conditions*

Referring to Fig. 6(d), it is worth noting that for β=2.0 the local temperature difference equates to zero at the temperature of around 205 K, which indicates impractical application. This is because over-large value of β leads to shortage of cold energy at a lower temperature range. Maximum limit value of β should be confined by the pinch value of temperature difference which is required in design standard. Thus, an optimal value β_{opt} should be evaluated at certain V_{NG} for both critical temperature difference and reduction of exergy loss. For V_{NG}= 100 Nm^3/h and ΔT_{min}=2 K, the optimal value of β is approximately equal to 1.69 and corresponding minimum power consumption is 0.682 kW h/Nm^3 , as seen from Fig. 10 and Fig. 9, respectively.

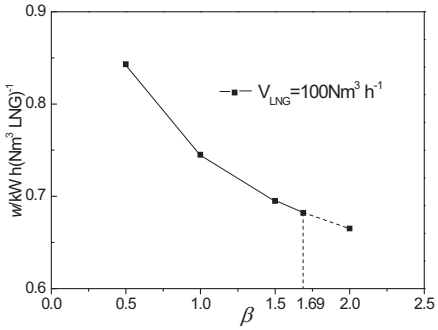

Fig. 9 Effect of β on power consumption

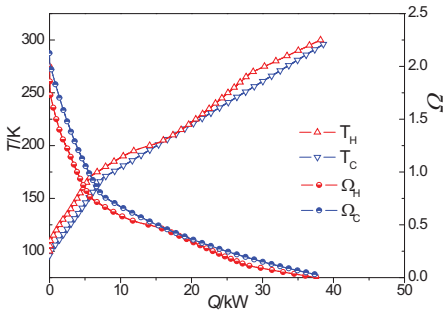

Fig. 10. Composite Curves at β_{opt}=1.69

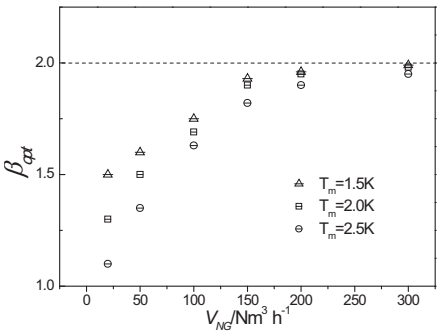

Fig. 11 β_{opt} for different LNG production

In addition, the optimal value β_{opt} should be corresponding to different minimum temperature differences required in design standard. Obviously, the larger prescribed ΔT_{min}, the lower optimal value β_{opt} is required, since more cycle nitrogen should be expanded at 2nd stage to create the sufficient cold energy at low-temperature region and thus enlarge critical temperature difference at pinch point. The correlation of β_{opt} with different V_{NG} for given ΔT_{min} is shown in Fig. 11. β_{opt} increases with V_{NG} and approaches a constant value, approximately 2.0.

V. CONCLUSION

An original concept, an integrated process combining air separation and liquefaction of natural gas is presented. Based on such an idea, a novel combined-cycle using recycle nitrogen expansion from air separation process (RNE) to liquefy natural gas is proposed, where liquefied natural gas (LNG) can be obtained meanwhile gas or liquid nitrogen and oxygen are produced.

The effect of flow ratio through two stages of expanders β on system performance is investigated. The magnitude of β is sensitive to the flow process. Exergy loss in heat exchange process decreases from 9.87 kW to 2.17 kW and thereby exergy efficiency increases from 68.2% to 88.1% as β is increased from 0.5 to 2.0. The value of β is confined by the pinch value of temperature difference and the liquefaction flow rate of natural gas.

Any further optimization of these combined-cycles would be trade-off between cost (capital and operating) and energy efficiency, each of which may be affected by factors peculiar to particular project. Other factors of importance are operability, reliability, and safety.

REFERENCES

[1] A.J. Finn, G.L. Johnson, T.R. Tomlinson, Developments in natural gas liquefaction, Hydrocarbon Processing, vol. 78, no. 4, pp. 47-56, 1999.
[2] M.A. Barclay, D.F. Gongaware, K. Dalton, M.P. Skrzypkowski, Thermodynamic cycle selection for distributed natural gas liquefaction, AIP Conference Proceeding, vol. 710, pp. 75-82, 2004.
[3] C.W. Remeljej, A.F.A Hoadley, An exergy analysis of small-scale liquefied natural gas (LNG) liquefaction processes, vol. 31, no. 12, pp. 2005-2019, 2006.
[4] R.L. Cornelissen, G.G. Hirs, Exergy analysis of cryogenic air separation, Energy Conversion and Management vol. 39, no. 18, pp. 1821-1826, 1998.
[5] Y. Li, N. Yan, H. Tuo, Small-scale gas liquefaction process using air separation refrigeration unit: China, CN1908558.
[6] J.P. Tranier, L.Roses. Combined air separation natural gas liquefaction plant: US, 7143606 B2. 2006-12-05.J.
[7] W.D. Seider, Process design principles, Wiley, New York, 1998.
[8] B. Linnhoff, Pinch analysis- a state-of-the-art overview, Trans. IChemE, vol. 71, pp. 503-522, 1993.
[9] X. Feng, X. Zhu, Combing pinch and exergy analysis for process modifications, Applied Thermal Engineering, vol. 17, no. 3, pp. 249-261, 1997.
[10] A. Aspelund, D. Berstad, T. GUndersen, An extended pinch analysis and design procedure utilizing pressure based exergy for subambient cooling, Applied Thermal Engineering, vol. 27, no. 16, pp. 2633-2649, 2007.
[11] A. Salama, Numerical techniques for determining heat energy targets in pinch analysis, Computers and Chemical Engineering, vol. 29, pp. 1861-1866, 2005.
[12] B. Linhoff, V.R. Dhole, Shaft work targets for low-temperature process design, Chemical Engineering Science, vol. 47, no. 8, pp. 2081-2091, 1992.