International Journal of Engineering, Mathematical and Physical Sciences
ISSN: 2517-9934
Vol:4, No:4, 2010

Synchronization Between Two Chaotic Systems: Numerical And Circuit Simulation

J.H. Park, T.H. Lee, S.M. Lee and H.Y. Jung

Abstract—In this paper, a generalized synchronization scheme, which is called function synchronization, for chaotic systems is studied. Based on Lyapunov method and active control method, we design the synchronization controller for the system such that the error dynamics between master and slave chaotic systems is asymptotically stable. For verification of our theory, computer and circuit simulations for a specific chaotic system is conducted.

Keywords—Chaotic systems, Synchronization, Lyapunov method, Simulation.

I. Introduction

During the last two decades, synchronization in chaotic dynamic systems has received a great deal of interest among scientists from various research fields [2]-[24] since Pecora and Carroll [1] introduced a method to synchronization two identical chaotic systems with different initial conditions. The idea of synchronization is to use the output of the master system to control the slave system so that the output of the response system follows the output of the master system asymptotically.

To date, various methods for chaos synchronization such as complete synchronization [12]-[13], phase synchronization [14] , lag synchronization [15], intermittent lag synchronization [16], time scale synchronization [17], intermittent generalized synchronization [18], projective synchronization (PS) [19], generalized synchronization [20], and adaptive modified projective synchronization [21]-[22] have been studied by many researchers. Amongst all kinds of chaos synchronization, the functional projective synchronization (FPS) is the state of the art subject of synchronization study. Recently, FPS has been reported by Chen et al. [23] and Runzi [24], that is the generalization of PS. As compared with PS, FPS means that the master and slave systems could be synchronized up to a scaling function, but not a constant.

In this paper, we consider the Lorenz chaotic systems as an example model for applying our function synchronization problem. Note that our control scheme can be applied to all chaotic models. To date, the numerical examples are only provided to verify synchronization algorithms without circuit simulations in most of research on chaotic synchronization. By the way, most of real practical chaos applications have been investigated by Chua's circuit which is a simple electronic circuit that exhibits chaotic behavior. But it is well-known that another chaotic systems have some errors between theoretical system parameters and practical system parameters. So, in this paper, the revised practical Lorenz master and slave systems will be applied to show our control scheme using NI Multisim 10.0.

This paper is organized ad follows. In Section 2, the problem statement and master-slave synchronization scheme are presented for Lorenz systems. In Section 3, a numerical simulation via Matlab is given to demonstrate the effectiveness of the proposed control method. In Section 4, circuit simulations are presented to show real applications of the method. Finally, concluding remarks are given in Section 5.

J.H. Park and T.H. Lee are with Department of Electrical Engineering, Yeungnam University, 214-1 Dae-Dong, Kyongsan 712-749, Republic of Korea. Email: jessie@ynu.ac.kr

S.M. Lee is with Department of Electronic Engineering, Daegu University, Gyungsan 712-714, Republic of Korea. Email: moony@daegu.ac.kr

H.Y. Jung is with Department of Information and Communication Engineering, Yeungnam University, Republic of Korea. Email: hoyoul@yu.ac.kr

This work was supported by the Korea Research Foundation (KRF) grant funded by the Korea government (MEST) (No. 2009-0075569).

II. Problem Statement and Synchronization Scheme

Consider the following master and slave chaotic systems

$$\dot{x}(t) = f(t, x), \tag{1}$$

$$\dot{y}(t) = g(t, y) + u(t, x, y), \tag{2}$$

where $x(t) = (x_1, x_2, \ldots, x_n)^T \in \mathcal{R}^n$ and $y(t) = (y_1, y_2, \ldots, y_n)^T \in \mathcal{R}^n$ are drive and response state vectors respectively, $f : \mathcal{R} \times \mathcal{R}^n \to \mathcal{R}^n$ and $g : \mathcal{R} \times \mathcal{R}^n \to \mathcal{R}^n$ are continuous nonlinear vector functions and $u(t, x, y) = (u_1, u_2, \ldots, u_n)^T \in \mathcal{R}^n$ is the control input for synchronization between master (1) and slave (2).

Definition 1. It is said that FPS occurs between master system (1) and slave system (2) if there exist scaling functions $\alpha_i(t)$ such that $\lim_{t\to\infty} \|\alpha_i(t)y_i(t) - x_i(t)\| = 0,\ (i = 1, 2, \cdots, n)$.

For convenience's sake to illustrate the scheme of FPS, we consider the following Lorenz master and slave systems:

$$\begin{aligned}
\text{Master}: \quad & \dot{x}_1(t) = a(x_2(t) - x_1(t)) \\
& \dot{x}_2(t) = bx_1(t) - x_1(t)x_3(t) - cx_2(t) \\
& \dot{x}_3(t) = x_1(t)x_2(t) - dx_3(t), \\
\text{Slave}: \quad & \dot{y}_1(t) = a(y_2(t) - y_1(t)) + u_1(t) \\
& \dot{y}_2(t) = by_1(t) - y_1(t)y_3(t) - cy_2(t) + u_2(t) \\
& \dot{y}_3(t) = y_1(t)y_2(t) - dy_3(t) + u_3(t),
\end{aligned} \tag{3}$$

where $a, b, c, d \in \mathcal{R}^+$, and it is well-known that the system is chaotic when $a = 10, b = 28, c = 1, d = 8/3$, and Fig. 1 shows chaotic motion of Lorenz system.

Now, let us define error signals in the sense of Definition 1 as

$$\begin{aligned} e_1(t) &= \alpha_1(t)y_1(t) - x_1(t) \\ e_2(t) &= \alpha_2(t)y_2(t) - x_2(t) \\ e_3(t) &= \alpha_3(t)y_3(t) - x_3(t). \end{aligned} \tag{4}$$

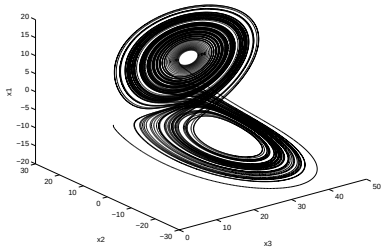

Fig. 1. Chaotic motion of Lorenz system

The time derivative of error signal (4) is

$$\begin{aligned} \dot{e}_1(t) &= \dot{\alpha}_1(t)y_1(t) + \alpha_1(t)\dot{y}_1(t) - \dot{x}_1(t) \\ \dot{e}_2(t) &= \dot{\alpha}_2(t)y_2(t) + \alpha_2(t)\dot{y}_2(t) - \dot{x}_2(t) \\ \dot{e}_3(t) &= \dot{\alpha}_3(t)y_3(t) + \alpha_3(t)\dot{y}_3(t) - \dot{x}_3(t). \end{aligned} \tag{5}$$

By substituting (3) into (5), the error dynamics is as follows:

$$\begin{aligned} \dot{e}_1(t) &= \dot{\alpha}_1(t)y_1(t) + \alpha_1(t)\big(a(y_2(t) - y_1(t)) + u_1(t)\big) \\ &\quad -a\big(x_2(t) - x_1(t)\big) \\ \dot{e}_2(t) &= \dot{\alpha}_2(t)y_2(t) + \alpha_2(t)\big(by_1(t) - y_1(t)y_3(t) - cy_2(t) \\ &\quad +u_2(t)\big) - \big(bx_1(t) - x_1(t)x_3(t) - cx_2(t)\big) \\ \dot{e}_3(t) &= \dot{\alpha}_3(t)y_3(t) + \alpha_3(t)\big(y_1(t)y_2(t) - dy_3(t) + u_3(t)\big) \\ &\quad -\big(x_1(t)x_2(t) - dx_3(t)\big). \end{aligned} \tag{6}$$

Here, our goal is to achieve functional projective synchronization between two Lorenz systems with different initial conditions. For this end, the following control laws are designed:

$$\begin{aligned} u_1 &= \frac{1}{\alpha_1(t)}\Big(-\dot{\alpha}_1(t)y_1(t) - a(\alpha_1(t)y_2(t) - x_2(t))\Big) \\ u_2 &= \frac{1}{\alpha_2(t)}\Big(-\dot{\alpha}_2(t)y_2(t) - b(\alpha_2(t)y_1(t) - x_1(t)) \\ &\quad +\alpha_2(t)y_1(t)y_3(t) - x_1(t)x_3(t)\Big) \\ u_3 &= \frac{1}{\alpha_3(t)}\Big(-\dot{\alpha}_3(t)y_3(t) - \alpha_3(t)y_1(t)y_2(t) + x_1x_2\Big), \end{aligned} \tag{7}$$

where $\alpha_i(t) \neq 0$ for all t, $(i = 1, 2, 3)$.
Substituting the control input (7) into Eq. (6) gives that

$$\begin{aligned} \dot{e}_1(t) &= -ae_1(t), \\ \dot{e}_2(t) &= -ce_2(t), \\ \dot{e}_3(t) &= -de_3(t). \end{aligned} \tag{8}$$

Then, we have the following theorem.
Theorem 1. For given scaling functions $\alpha_i(t)(i = 1, 2, 3)$, the FPS between master and slave systems given in Eq. (3) will occur by the control law (7).
This implies that the error signals satisfy $\lim_{t\to\infty} \|e_i(t)\| = 0$ $(i = 1, 2, 3)$.

Proof. Let us define the following Lyapunov function candidate

$$V = \frac{1}{2}(e_1^2 + e_2^2 + e_3^2). \tag{9}$$

By differentiating Eq. (9) and using (7), we obtain

$$\begin{aligned} \dot{V} &= e_1\dot{e}_1 + e_2\dot{e}_2 + e_3\dot{e}_3 \\ &= -\begin{bmatrix} e_1 \\ e_2 \\ e_3 \end{bmatrix}^T \begin{bmatrix} a & 0 & 0 \\ 0 & c & 0 \\ 0 & 0 & d \end{bmatrix} \begin{bmatrix} e_1 \\ e_2 \\ e_3 \end{bmatrix} \\ &\equiv -e^T Pe < 0, \end{aligned} \tag{10}$$

which guarantees the stability of error systems in the sense of Lyapunov theory. Therefore, the slave system synchronize the master system in the sense of FPS (4). This completes the proof. □

III. Numerical simulation

In order to demonstrate the validity of proposed ideas, numerical simulation is presented. Fourth-order Runge-Kutta method with sampling time $0.0001[\text{sec}]$ is used to solve the system of differential equations (3).
The system parameters are used by $a = 10, b = 28, c = 1, d = 8/3$ in numerical simulation. The initial conditions for master and slave system are given by $x(0) = (1, 3, -3)^T$ and $y(0) = (-1, -3, 2)^T$, respectively. The scaling functions for functional synchronization are taken for a choice as

$$\alpha_1(t) = -2,\ \alpha_2(t) = 1.1 + \cos t,\ \alpha_3(t) = -2 + \sin 2t. \tag{11}$$

Fig. 2 shows that error signals of FPS go to zero asymptotically. It means FPS occurs between state of x and state of y.

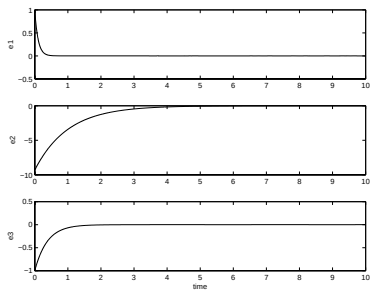

Fig. 2. Error signals of numerical example

IV. Circuit simulation

In this section, we present circuit simulations for proposed synchronization scheme. But based on master system of (3), electronic circuit has major problem: The range of state variables given in Eq. (3) over the limit of power supply. So we use transformed values to eliminate this problem. The reasonable transformation is $u = x/10, v = t/10, w = z/20$

[25]-[27].

Consider the following transformed Lorenz equations

$$\begin{aligned}\dot{u}(t) &= \sigma(v(t) - u(t))\\ \dot{v}(t) &= ru(t) - v(t) - 20u(t)w(t)\\ \dot{w}(t) &= 5u(t)v(t) - bw(t),\end{aligned} \tag{12}$$

where $\sigma = 16, r = 45.6, b = 4$.

This system can be more easily operated with analog circuit because the state variables all gave similar dynamic range and circuit voltages remain well within the range of typical power supply limits. The analog circuit of transformed Lorenz Eq.(12) is shown in Fig. 3.

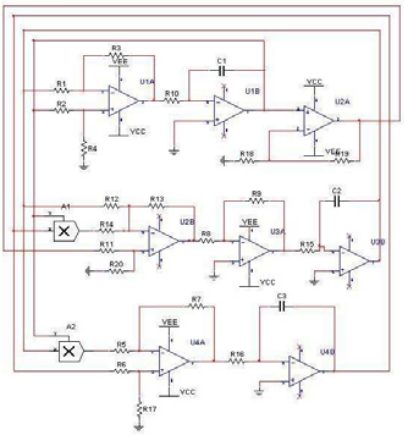

Fig. 3. Lorenz circuit

The electrical equations of the circuit are given by

$$\begin{aligned}\dot{u}(t) &= \frac{1}{R_{10}C_1}\Big[\frac{R_3}{R_1}v(t) - \frac{R_4}{R_2+R_4}(1+\frac{R_3}{R_1})u(t)\Big]\\ \dot{v}(t) &= \frac{1}{R_{15}C_2}\Big[\frac{R_{20}}{R_{11}+R_{20}}(1+\frac{R_{13}}{R_{12}}+\frac{R_{13}}{R_{14}})\\ &\times(1+\frac{R_{19}}{R_{18}})u(t) - \frac{R_{13}}{R_{12}}v - \frac{R_{13}}{R_{14}}u(t)w(t)\Big]\\ \dot{w}(t) &= \frac{1}{R_{16}C_3}\Big[\frac{R_7}{R_5}u(t)v(t) - \frac{R_{17}}{R_6+R_{17}}\\ &\times(1+\frac{R_7}{R_5})w(t)\Big],\end{aligned} \tag{13}$$

where Eq. (13) is equivalent to Eq. (12) after rescaling time by a factor of 2505, and the required electrical parameters are: $R_1, R_2, R_3, R_4, R_5, R_6, R_7, R_8, R_9, R_{18}, R_{19} = 100K\Omega$; R_{10}, $R_{11} = 49.9K\Omega$; $R_{13}, R_{14} = 10K\Omega$;, $R_{12} = 200K\Omega$; $R_{15} = 40.2K\Omega$; $R_{16} = 158K\Omega$; $R_{17} = 66.5K\Omega$; $R_{20} = 63.4K\Omega$; $C_i = 500pF, (i = 1\ldots3)$.

Fig. 4 displays phase to phase of master system of $x_1 - x_2$, $x_1 - x_3$, $x_2 - x_3$, respectively.

For our synchronization scheme, the circuit of slave system is described by Fig. 5. And the required electrical parameters are: R_{21}, R_{22}, R_{23}, R_{24}, R_{26}, R_{27}, R_{33}, R_{34}, R_{36}, R_{37}, R_{39}, R_{80}, R_{81}, R_{82}, R_{83}, R_{84}, R_{85}, R_{86}, R_{87}, R_{88}, R_{89}, R_{90}, $R_{91} = 100K\Omega$; R_{25}, $R_{30} = 49.9K\Omega$; R_{29}, $R_{30} = 10K\Omega$; $R_{28} = 200K\Omega$; $R_{31} = 63.4K\Omega$; $R_{35} = 40.2K\Omega$; $R_{38} = 66.5K\Omega$; $R_{40} = 158K\Omega$; $C_i = 500pF, (i = 1\ldots3)$.

To show the effect of control input, we run the circuit without control inputs and then circuit simulation results are obtained for two cases, complete synchronization ($\alpha_1 = \alpha_2 = \alpha_3 = 1$) and functional projective synchronization with the same scaling factor given in Eq. (11). The Fig. 6 and Fig. 7 display phase-phase and time-phase situations of master and slave systems given for the two cases. One can see that the errors do not approach to zero as expected since the control inputs are not applied.

Now, let us consider the circuit of the whole synchronizing system given in Fig. 8.

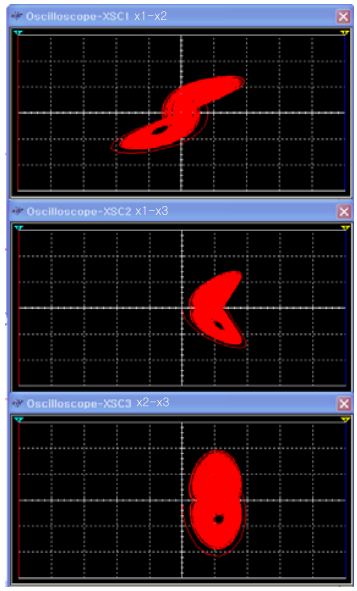

Fig. 4. Chaotic phase of Lorenz system

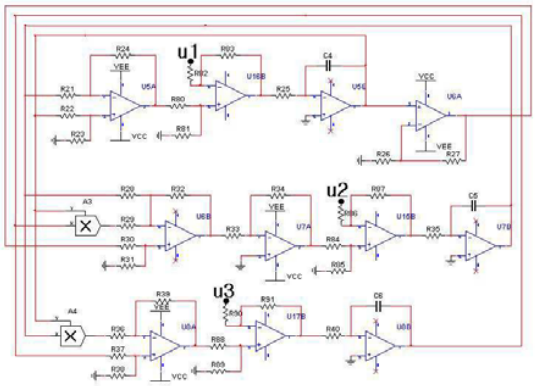

Fig. 5. Slave system circuit

The whole circuit is structured as three parts: master systems, slave systems, and controllers. In the control part, scaling functions $\alpha_i(t)$ $(i = 1, 2, 3)$ are constituted by function generator. Then, Fig. 9 displays that FPS of Lorenz system is achieved by control inputs.

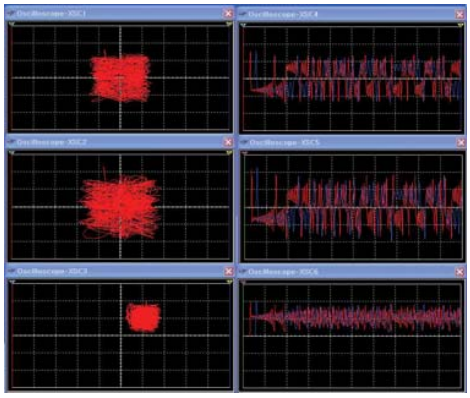

Fig. 6. Simulation results for complete synchronization without control

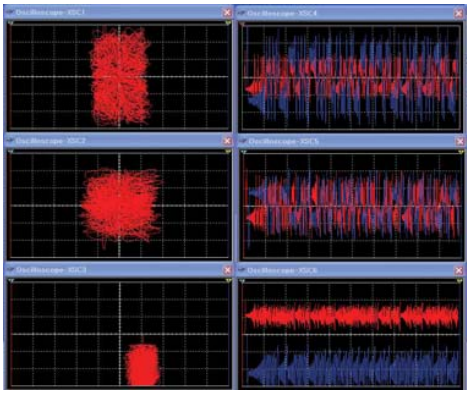

Fig. 7. Simulation results for functional projective synchronization without control

V. Concluding Remarks

In this paper, we have investigated the functional projective synchronization problem for Lorenz systems. The proposed control scheme is verified by computer and circuit simulations of the system. The final remark is that the proposed method is applicable to any chaotic systems.

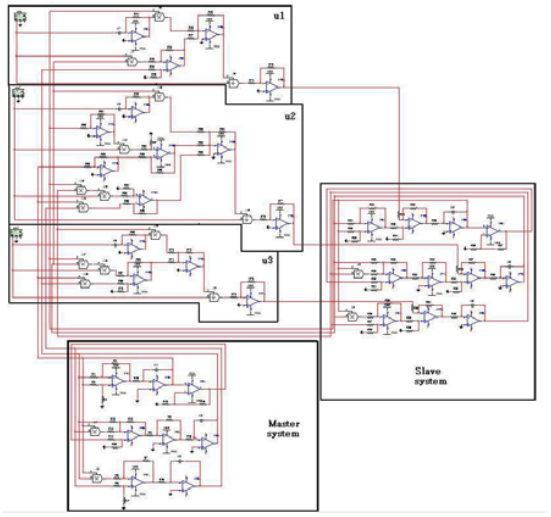

Fig. 8. Circuit for controlled systems

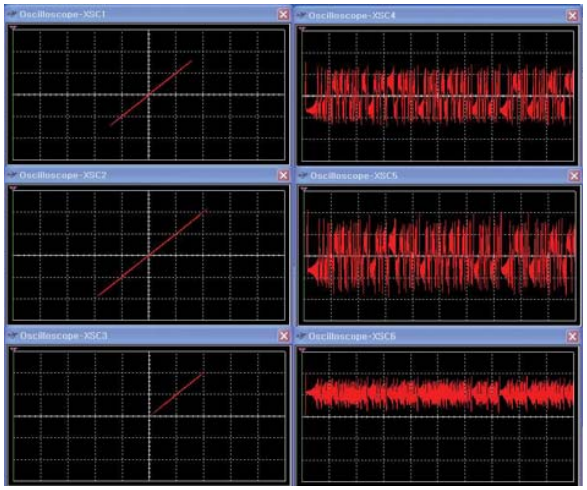

Fig. 9. Simulation results for functional projective synchronization with control

References

[1] L.M. Pecora, T.L. Carroll, Phys, Rev, Lett. 64 (1990) 821-824.
[2] J.H. Park, Chaos Solitons Fractals 34 (2007) 1154.
[3] J.H. Park, O.M. Kwon, Chaos Solitons Fractals 23 (2005) 445.
[4] J. Lu, X. Wu, J. Lü, Phys Lett A 305 (2002) 365.
[5] J. Lü, T. Zhou, S. Zhang, Chaos Solitons Fractals 14 (2002) 529.
[6] J. Lü, X. Yu, G. Chen, Physica A 334 (2004) 281.
[7] M.T. Yassen, Physics Letters A 350 (2006) 36.
[8] J.H. Park, O.M. Kwon, Modern Physics Letters B 23 (2009) 35.
[9] X. Wu, J. Lu, Chaos Solitons Fractals 18 (2003) 721.
[10] D. Li, J.A. Lu, X. Wu, Chaos Solitons Fractals 23 (2005) 79.
[11] U.E. Vincent, Phys Lett A 343 (2005) 133.
[12] J.H. Park, Chaos Solitons Fractals 27 (2006) 549.
[13] J.H. Park, Chaos Solitons Fractals 27 (2006) 357.
[14] M.G. Rosenblum, A.S. Pikovsky, J, Kurths, Phys. Rev. Lett 76 (1996) 1804.
[15] M.G. Rosenblum, A.S. Pikovsky, J, Kurths, Phys. Rev. Lett 78 (1997) 4193.
[16] S. Boccaletti, D.L. Valladares, Phys. Rev. E 62 (2000) 7497.
[17] A.E. Hramov, A.A. Koronovsii, Chaos 14 (2004) 603.
[18] A.E. Hramov, A.A. Koronovsii, Europhys. Lett. 72 (6) (2005) 901.
[19] R. Mainieri, J. Rehacek, Phys. Rev. Lett. 82 (1999) 304.
[20] J.H. Park, Chaos, Solitons Fractals, 34 (2007) 1154.
[21] J.H. Park, D.H. Ji, S.C. Won, and S.M. Lee, Modern Physics Letters B 23 (2009) 1157.
[22] J.H. Park, Chaos Solitons Fractals 25 (2005) 333.
[23] Y. Chen, H. An, Z. Li, Appl. Math. Comput. 197 (2008) 96.
[24] L. Runzi, Phys Lett A 372 (2008) 3667.
[25] K.M.Cuomo, A.V.Oppenheim, S.H.Strogatz, IEEE Trans Cir Syst-II 40 (1993) 626-633.
[26] T. Gao, G. Chen, Z. Chen, S. Cang, Phys Lett A 361 (2007) 78-86.
[27] K.M.Cuomo, A.V.Oppenheim, phys rev lett 71 (1993) 65-68.