International Journal of Mechanical, Industrial and Aerospace Sciences
ISSN: 2517-9950
Vol:8, No:6, 2014

Dynamic Modeling of a Robot for Playing a Curved 3D Percussion Instrument Utilizing a Finite Element Method

Prakash Persad, Kelvin Loutan, Jr., Trichelle Seepersad

Abstract**—**The Finite Element Method is commonly used in the analysis of flexible manipulators to predict elastic displacements and develop joint control schemes for reducing positioning error. In order to preserve simplicity, regular geometries, ideal joints and connections are assumed. This paper presents the dynamic FE analysis of a 4- degrees of freedom open chain manipulator, intended for striking a curved 3D surface percussion musical instrument. This was done utilizing the new MultiBody Dynamics Module in COMSOL, capable of modeling the elastic behavior of a body undergoing rigid body type motion.

Keywords**—**Dynamic modeling, Entertainment robots, Finite element method, Flexible robot manipulators, Multibody dynamics, Musical robots.

I. Introduction

RESEARCH on robots, capable of playing a range of musical instruments, has been ongoing for decades. The robot discussed in this paper is being designed to play melodies on a curved 3D surface percussion instrument using two manipulators. To date, the focus of research has been on robots capable of playing flat percussion instruments. That considered in this paper, consists of a circular drumming surface which is divided into convex sections containing a series of musical notes thereby allowing more than one pitch to be played by striking the notes with a rubber ended stick. There are 29 notes with the lower-pitched notes situated near the edge of the instrument and higher pitches towards the center. The manipulator must be able to move from one note to another in specific time intervals so as to produce a melody similar to that of a human player.

For high speed manipulator actuation, the assumption of rigid dynamics and kinematics is no longer valid and the flexible nature of manipulators needs to be considered [1]. The finite element method (FEM) has been the dominant method for approximating flexural deflections in elastic links. The general procedure involves discritizing the link into elements, obtaining the kinetic and strain energies, applying Hamilton's principle to obtain the nodal displacements and then uses shape functions (usually Hermitan) to obtain the displacement field along each element (usually Bernoulli-Euler beam). The approach adopted is to accurately model the flexible nature of manipulators while simultaneously maintaining simplicity in the generated PDEs, by varying the assumptions made during the general procedure.

A nonlinear FEM is proposed in of a manipulator, assuming three Cartesian and two angular degrees of freedom (DOF) at each node thereby permitting out of plane bending [2]. The strain energy formulation included quadratic terms as well as foreshortening effects due to bending. Simulation results were compared to that of experiments utilizing a 1-DOF manipulator 1m in length. It was found that the proposed method had a smaller tip displacement error when compared to previous methods neglecting higher order terms in the strain formulation as well as foreshortening effects. It was also observed that a lower number of elements are required by the new method to give a similar error as compared to that of linear methods.

Three methods of modeling a single DOF, flexible manipulator were compared in [3]. These methods were: the assumed mode method utilizing both linear and quadratic displacements, and the finite element model. Upon comparing simulation results of all three methods to that of an experiment, it was found that the assumed modes method with quadratic displacements yielded better hub angle results, while the FE method with five elements yielded better hub velocity and end-point acceleration.

An algorithm was developed to determine the maximum allowable payload for a given torque input range and end-effector trajectory [4]. 3-DOF were assumed at each node with a linear strain relationship. The formulation was redone in [5] whereby a non-linear strain relationship was assumed in an attempt to more accurately capture the large nodal deflections of elements undergoing large overall deformations. The same simulation parameters were applied in both papers and the results comparison indicated that at high rotation speeds, end-effector displacement were significantly different for both models suggesting that the linear-strain formulation is inadequate for high speed manipulation.

An inverse use of the FEM was done in [1] whereby controlling of the tip motion is achieved by directly computing the torque necessary to apply at the other end of a single link. Simulations suggest that there was a lag between torque input and tip displacement. This was explained by the author as the wave speed in the flexible link being finite, thus time is required for the torque to travel from the hub to the tip. This was confirmed by increasing the rigidity of the link in the simulation, resulting in a smaller lag time. Since the generated

P. Persad, K. Loutan, Jr., and T. Seepersad are with the Design and Manufacturing Department, University of Trinidad and Tobago, O'Meara Road, Trinidad and Tobago (e-mail: prakash.persad@utt.edu.tt, kelvinloutan@hotmail.com, trichelle@gmail.com).

input torque was able to provide the tip displacement required, it was suggested that the purpose technique is ideal for open-loop control. Another inverse use of the FEM was executed by [6] where knowledge of a robot's parameters inclusive of modal analysis done by the hammer strike method was used as input parameters into the FE formulated dynamic model to determine unknowns such as joint stiffness and damping. The model has been successfully validated by experimental testing performed on a parallel manipulator.

FE software in the context of robot design has been used as a tool to structurally evaluate manipulator links. In an attempt to increase link stiffness, [7] introduced pre-stressing effects which were statically modeled in ANSYS. The results were compared to an analytical solution developed by the authors, validating the FE model. ANSYS is used both as an optimizing and analysis tool in [8]; The design parameters of a prismatic robot's base has been determined by use of the optimization function in the software, with the state variables being the allowable stress and deflection of the component, and the objective function being the volume (and as such the weight) of the component. Each iteration was a static analysis as was the case in [9]. In [10] the elastic deformation of individual links of a gantry robot were obtained utilizing a static model in a FE software in which case the joint stiffness were included. The overall elastic behavior of the entire robot was thus approximated and substituted into a modified Denavit-Hartenberg (D-H) formulation to obtain the volumetric accuracy. If a rigid body dynamic analysis is done to determine actuation torques, the inertial forces on each link with respect to time can also be obtained. The authors of [11] utilized these forces and performed a 3D FE transient analysis on individual links modeled as cantilevers. An iterative process involving the obtained stiffness and displacements from the FE model, and manipulator link parameters was invoked until a suitable link design was obtained. Individual analysis of manipulator links may not accumulatively tell the entire parametric story of the manipulator. This was suggested by [12] where the structure of a single link of a 3-DOF manipulator with input distributed forces across the link was analyzed in ANSYS and compared to the models: single link+transmission system and single link+transmissionsystem+second link. It was observed that there was an improvement in the displacements and natural frequencies of the initially modeled link when the second link was introduced into the model.

In this paper, the kinematic and dynamic design of the robot is reviewed followed by an overview of the module used in COMSOL for the analysis. Before the actual robot is analyzed, a pre-analysis was conducted to validate solver and meshing parameters. The robot is then analyzed assuming rigid links to obtain the ideal end effector's trajectory. The model is then redone assuming all links to be flexible. The deviation from the ideal trajectory is then quantified and presented.

II. Design Background

This section briefly presents previous work done on a robot for playing a curved 3D surface percussion instrument [13].

A. Manipulator Design

The behavior of a robot is affected by the choice of the robot parameters such as, DOF, joint allocation, link length, link masses, joint friction, feedback gains, and motor parameters. The workspace and number of DOF is essential so as to ensure the manipulators are able to reach all the notes, but not be kinematically redundant. It is also important that the motors selected are capable of providing high torques and speeds for each of the selected joints on the arm.

It is therefore proposed that each arm be designed with four rotary joints, one at the shoulder, two at the elbow and one at the wrist. The reference coordinate is at the shoulder joint and is attached to the base of the robot. In this system each arm consists of 4-DOF: 3 positions in the x, y and z axis and 1 rotation in the z- axis.

This manipulator is required to move from one note to another very quickly and is therefore required that the angular velocities at each joint be no less than 2rad/s. This velocity may be considered quite high for controlling with acceptable accuracy, thus the need for determining the positioning error of the rubber ended stick (referred to as the end effector in following chapters).

The links are made of hollow rectangular aluminum sections since weight plays an important part in the design of this robot. Each arm consists of four links. There is a small link between the two elbow joints, one between the shoulder and the elbow and one between the elbow and the wrist. The link at the wrist is used to attach to the rubber ended stick which is used to strike the surface.

Table I shows the link parameters used for the simulation.

TABLE I
LINK PARAMETERS

Link	Length	Mass
1	0.42m	0.34kg
2	0.06m	0.049kg
3	0.37m	0.30kg
4	0.19m	0.154kg

B. Kinematic Model

The Kinematic Model was determined using the Denavit-Hartenberg (D-H) notation [14]. By using the direct or forward kinematics, the positions and orientations of the end effector of the manipulator is found given the joint variables with respect to the reference coordinate system.

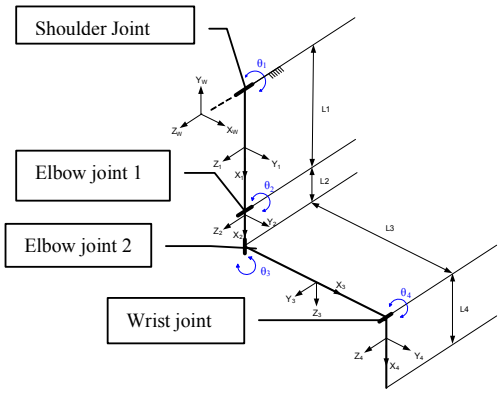

Fig. 1 Skeleton of Robot with coordinate frames in the zero position and geometric variables for Kinematic Modeling

III. Modeling with COMSOL

COMSOL is a multi-physics finite element modeling software package that recently included a multibody dynamics module. This module can be used to model the dynamic behavior of rigid or flexible bodies, or a combination of both, which are connected through joints that allow and constrain desired DOF. The system PDE's are developed utilizing the Lagrangian formulation, and solved for the Dirichlet and Neumann boundary conditions which are applied to the domains. Forward and inverse dynamics can be performed on both rigid and flexible bodies, with the latter model generating the material elastic displacement field from which stresses and strains can be derived.

A. Pre-Analysis

To establish confidence in the COMSOL solution, a pre-analysis was done comparing the results of an analytical model to that of the same model analysed in COMSOL. For this, a 1-DOF manipulator with a circular hollow constant cross-section and tip payload (Fig. 2) actuated by a sinusoidal torque was selected, with no material damping, the details of which are given in Table II. The analytical model was developed in [15] and the results of angular displacement, angular velocity and Von Mises stress were obtained and compared for a time of similar span to the actual model. The joint angular displacement and velocity represents the results associated with the rigid body motion, while the Von Mises stress result is a representation of the elastic response of the flexible body. The Von Mises stress at 0.33m along the length of the manipulator was obtained and a maximum error of 5MPa was observed between both models.

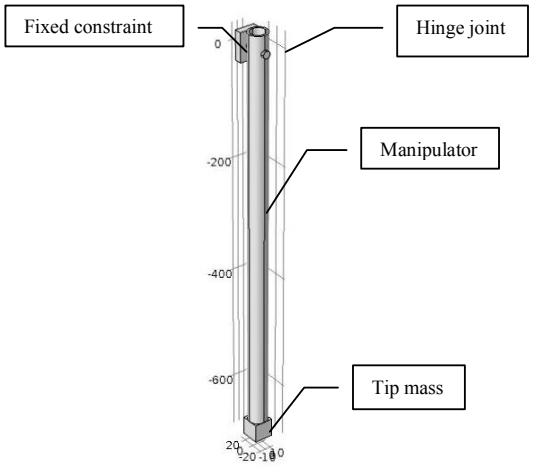

Fig. 2 Pre-analysis geometry in COMSOL

TABLE II
Parameters Of Single DOF Elastic Manipulator

Parameter	Value
Outer radius	16.7 mm
Inner radius	13.3 mm
Manipulator length	661 mm
Tip mass	0.25 kg
Modulus of elasticity	200 GPa
Density	7850 kg/m^3
Poisson's ratio	0.3
Gravity	0 m/s^2
Actuation torque	$100 \sin 30t$ Nm

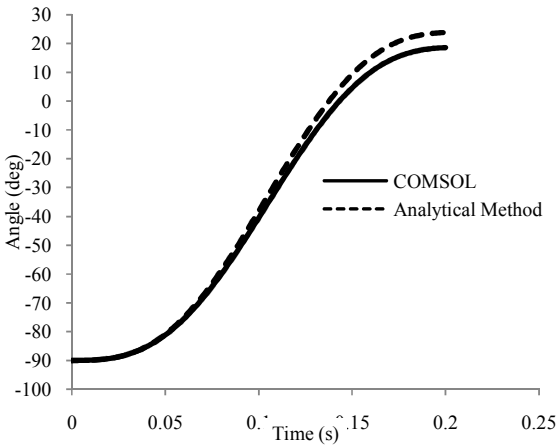

Fig. 3 Comparison of joint angle for both models

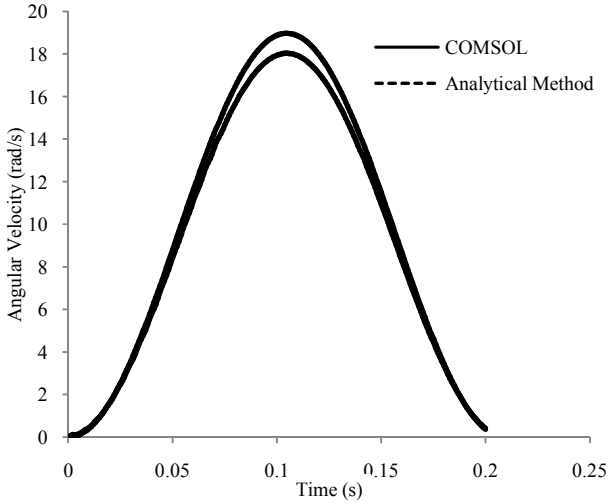

Fig. 4 Comparison of joint angular velocity for both models

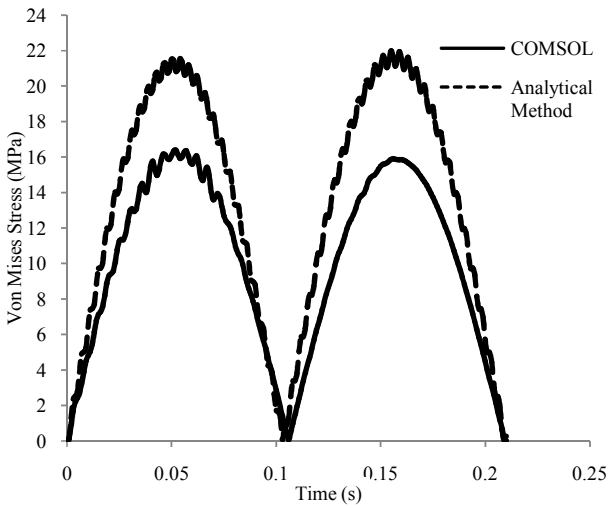

Fig. 5 Comparison of Von Mises stress at 0.33m for both models

B. Detailed Analysis

A 3D solid model of each link was done and assembled in a CAD program, then imported into COMSOL. To reduce computational effort, the weights of the motors were included on the links by having the equivalent volume of the links' material attached to the links. This allowed the geometry to be decomposed to only 5 domains, connected by hinge joints (Fig. 6).

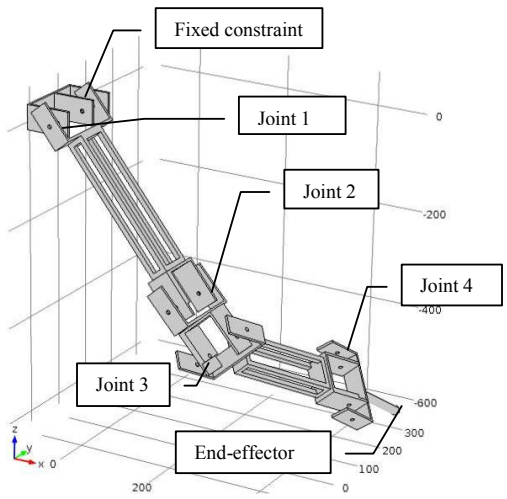

Fig. 6 Robot geometry in COMSOL

With the intended open-loop control scheme, the joint angles and actuation times required for a specific note, will be the only parameters specified during programming. For the purpose of this simulation, the robot's end effector will be required to move from the $G^{\#}$ to D_4 note in a time of 0.238s. These specific parameters represent the furthest distance to be travelled between 2 points on the playing surface, in the shortest travel time. With the 4 boundary conditions, the joint trajectories can be represented by the cubic polynomials:

$$\theta_1(t) = -34.2t^2 + 95.8t^3 \quad (1)$$

$$\theta_2(t) = 75.8t^2 - 212.3t^3 \quad (2)$$

$$\theta_3(t) = -34.2t^2 + 95.8t^3 \quad (3)$$

$$\theta_4(t) = -46.2t^2 + 129.5t^3 \quad (4)$$

Rigid and flexible models were done with acceleration due to gravity applied to all domains in the negative z direction. Displacements; δ_x, δ_y, δ_z and δ_{total} of the end effector's tip were obtained, referenced from the initial position ($G^{\#}$ note) for both rigid and flexible models. The positioning error is thus given as:

$$E_i = \delta_{i,rigid} - \delta_{i,flexible} \quad (5)$$

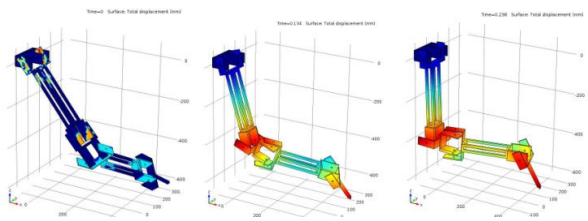

Fig. 7 Robot positions at 0s, 0.134s and 0.238s

IV. Discussion and Results

In an attempt to capture the maximum possible amplitudes of oscillation, damping was neglected from the model. These

oscillations, quantified as the positioning errors in the x, y and z directions, are of interest only after the robot has reached its final destination. As such the simulation time was extended by 0.162s beyond the actuation time to 0.4s, to simulate the oscillation of the end effector tip after the robot has come to rest at note D_4. Fig. 8 describes the overall displacement of the end effector's tip for both models. The greatest deviation occurs when joint accelerations are at their minimum, thus rendering the method of solely using inertial forces as input forces, an inappropriate design strategy. The errors in 3 orthogonal planes for the times beyond 0.238s are given in Figs. 9-11. The limits of the horizontal axes represent the dimension of the note.

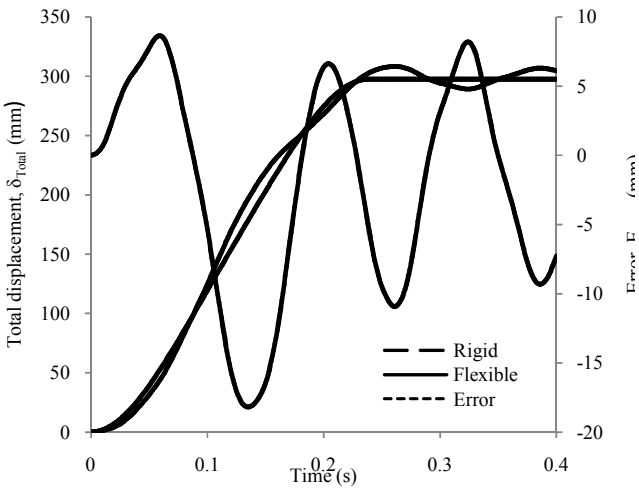

Fig. 8 Total displacement of end-effector tip for both models

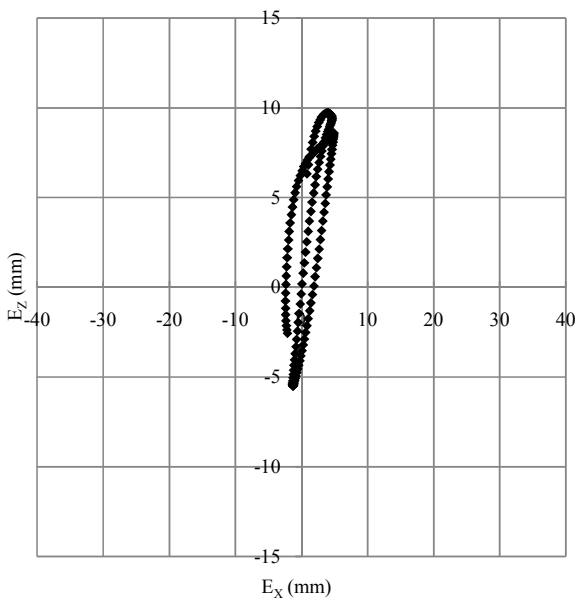

Fig. 9 Positioning error in the X-Z plane

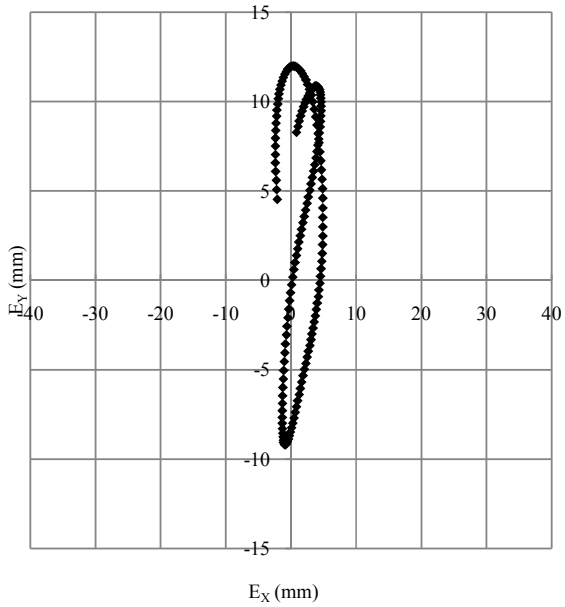

Fig. 10 Positioning error in the X-Y plane

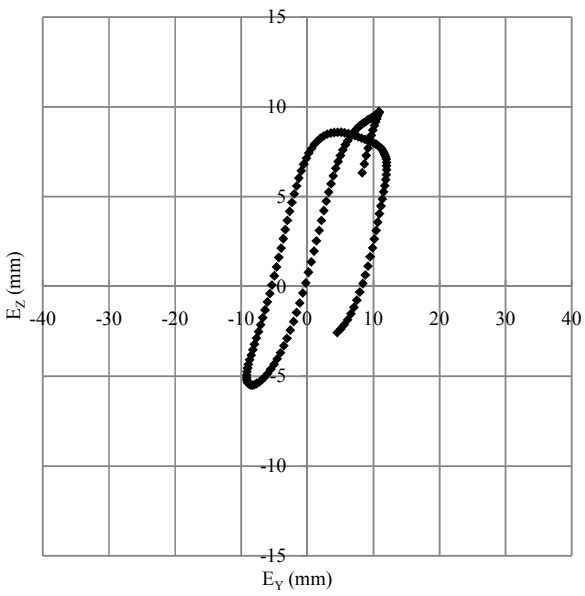

Fig. 11 Positioning error in the Y-Z plane

Fig. 12 visually compares the locus of the positioning error with the note's surface. It is apparent that the error is negligible when compared to the target area. It is common to assume (as in this model) that the supporting frame is rigid. While this simplifies the model, this frame ultimately provides all the reaction forces and torques required for motion. Unless it is intended for the support frame to be over designed, flexural displacements will occur contributing to the positioning error.

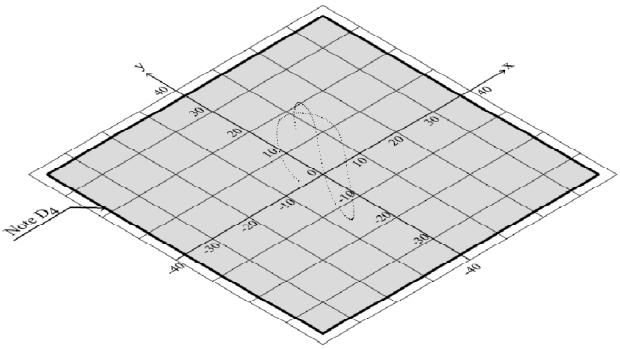

Fig. 12 3D plot of positioning error on note surface for t > 0.238s

Motor shafts and transmission systems which contribute significantly to joint flexibility are neglected. The model therefore assumes that the joints are rigidly locked when note D_4 is reached. In addition to the under estimating of positioning error, this assumption unrealistically predicts high reaction moments to abruptly stop a joint, generating high stresses in connecting links in the vicinity of the said joint. Coupling the Multibody Dynamics and Structural Mechanics Module, mechanical components left out of traditional robot modeling and simulation, such as fasteners, can be included to provide a more accurate depiction of joint and link stiffnesses.

V. CONCLUSION

A finite element model utilizing COMSOL's new Multibody Dynamics Module has been used to obtain the end effector positioning error arising from the flexible nature of the manipulator links. Given the errors' small scale compared to the note's approximate surface area of 75x 75 mm^2, it can be concluded from this analysis that the flexible nature of the links coupled with high joint actuation velocities would not have a significant impact on the accuracy of note striking/playing. The importance of joint stiffness has been identified and as such an inclusion of the mechanical transmission system and the supporting frame into the model will be the subject of further analysis and experimental validation.

REFERENCES

[1] E. Bayo, "A finite element approach to control the end point motion of a single-link flexible robot,"*J. Robotic Sys.* vol. 4, no. 1, John Wiley & Sons, Inc. pp. 69-75, 1987.

[2] H. R. Heidari M. H. Korayem, M. Haghpanahi, and V. F. Batlle, "A new non-linear finite element model for the dynamic modelling of flexible link manipulators undergoing large deflections," *Proc. IEEE Int. Conf. Mechatronics,*Instabul, Apr. 2011.

[3] J. M. Martins, Z. Mohamed, M. O. Tokhi, J. Sá da Costa, and M. A. Botto, "Approaches for dynamic modelling of flexible manipulator systems," *Proc. IEEE Control Theory Appl,* vol. 150, no. 4, Jul. 2003.

[4] M. H. Korayem, A. Heidari, and A. Nikoobin, "Maximum allowable dynamic load of flexible mobile manipulators using finite element approach," *Int. J. Adv. Manuf. Technol,* vol. 36, pp. 1010-1021, Jan. 2007.

[5] M. H. Korayem, M. Haghpanahi, and H. R. Heidari, "Maximum allowable dynamic load of flexible manipulators undergoing large deformation," *ScienticaIranica, Transaction B,* vol. 17, no. 1, pp. 61-74, Feb. 2010.

[6] M. Rognant, E. Courteille, and P. Maurine, "A systematic procedure for the elastodynamic modelling and identification of robot manipulators," *IEEE Trans. Robotics*, vol. 26, no. 6, pp. 1085–1093, Dec. 2010.

[7] K. A. Malek, and B. Paul, "Criteria for the design of manipulator arms for a high stiffness-to-weight ratio," *J. Manu. Sys.* vol. 17, no. 3, pp 209-220, 1998.

[8] M. H. Korayem, N. Shiehbeiki, and T. Khanali, "Design, manufacturing and experimental test of a prismatic robot for an assembly line," *Int. J. Adv. Manuf. Technol,* vol. 29, pp. 379-388, Jul. 2005.

[9] X. Tian, Y. Liu, R. Lin, B. Cai, Z. Liu, and R. Zhang, "Finite element analysis based design of mobile robot for removing plug oil well," *J. of Computers,* vol. 8, no. 6, pp 1504-1511, June 2013.

[10] D. A. Marinescu, and A. F. Nicolescu, "Gantry robot volumetric error evaluation using analytical and FEM modelling," *Proc. 21st Int. DAAAM. Symp,* vol. 21, no. 1,Vienna, 2010.

[11] J. Baur, J. Pfaff, H. Ulbrich, and T. Villgrattner, "Design and development of a redundant modular multipurpose agricultural manipulator," *Proc. IEEE/ASME Int. Conf. Adv. Intelligent. Mechatronics,* Jul. 2012.

[12] G. Munteanu, and A. Ghiorghe, "Kinematic chain and structure behaviour analysis for second joint of 'RRR' type robot in order to increase its positioning accuracy," *Proc. 20th Int. DAAAM. Symp,* vol. 20, no. 1,Vienna, 2009.

[13] P. Persad, T. Seepersad, and K. Loutan Jr., "Development of a robot for playing a curved 3D surface percussion instrument,"*Proc. 2ndIASTED Int. Conf. Robotics*, pp. 398-403,Pittsburgh, Nov. 2011.

[14] J. Denavit,and R.S. Hartenberg,"A kinematic notation for lower-pair mechanisms based on matrices,"*J. Applied Mechanics*, vol. 22, pp.215-221, 1955.

[15] P. Persad,, K. Loutan,and C. Maharaj, "Dynamic stress analysis of a spring actuated manipulator with tip payload," *Proc. IASTED Int. Conf. Robotics,*Phuket, Nov. 2010.