International Journal of Electrical, Electronic and Communication Sciences
ISSN: 2517-9438
Vol:5, No:8, 2011

Analysis of a Singular Perturbed Synchronous Generator with a Bond Graph Approach

Gilberto Gonzalez-A, Noe Barrera-G

***Abstract*—**An analysis of a synchronous generator in a bond graph approach is proposed. This bond graph allows to determine the simplified models of the system by using singular perturbations. Firstly, the nonlinear bond graph of the generator is linearized. Then, the slow and fast state equations by applying singular perturbations are obtained. Also, a bond graph to get the quasi-steady state of the slow dynamic is proposed. In order to verify the effectiveness of the singularly perturbed models, simulation results of the complete system and reduced models are shown.

***Keywords*—**Bond graph modelling, synchronous generator, singular perturbations

I. Introduction

THE synchronous machine has long been the most important of the electromechanical power conversion devices, playing a key role both in the production of electricity and in certain special drive applications. Thus, an understanding of their characteristics and accurate modelling of their dynamic performance are of fundamental importance to the study of power system stability.

The modelling and analysis of the synchronous machine has always been a challenge. The problem was worked on intensely in the 1920s and 1930s, and has been the subject of several more recent investigations..

Many books and papers have used the traditional mathematical model of a synchronous machine [1], [2], [3]. Nevertheless in [4] a synchronous machine model considering a class of equivalent circuits with sufficient flexibility to permit the introduction of an arbitrary number of damper windings. Also, the singular perturbations method is applied to synchronous machine without damping windings in [5]. The transfer function block diagram model of a generator has been employed to analyze generator dynamic characteristics in [6].

Hence, it is useful to develop mathematical models of a synchronous machine to explain their electric, magnetic and mechanical behavior. However, these phenomenons using a bond graph model of the system can be analyzed in a direct and graphical way.

In other wise, bond graph was established by [7]. The idea was developed by [8] and [9] how a powerful tool of modelling. The main key points of the bond graph methodology are: a model containing the energetic junction structure, i.e., the system architecture; different energy domains are covered and the coupling of subsystems are allowed; the cause to effect relations of each element are obtained graphically; and the state variables have a physical meaning.

A bond graph is a model of a dynamic system where a collection of components interact with each other through energy ports. These components are placed in the system which exchanges energy. A bond graph consists of subsystems linked by lines to show the energetic connections. A bond graph can represent a variety of energy types and describes how the power flows through the system [7], [8].

A fundamental problem in the theory of systems and control is the mathematical modeling of a physical system. The realistic representation of many systems calls for high-order dynamic equations. The presence of some parasitic parameters, such as small time constants, resistances, inductances, capacitances, moments of inertia, and Reynolds number, is often the source for the increased order and stiffness of these systems. The stiffness, attributed to the simultaneous occurrence of slow and fast phenomena, gives rise to time scales. The systems in which the suppression of a small parameter is responsible for the degeneration (or reduction) of dimension (or order) of the system are labeled as singularly perturbed systems, which are a special representation of the general class of time scale systems [13].

The purpose of this work is to apply the bond graph methodology to a synchronous machine on the two-axis theory, in order to obtain the simplified models of this electromechanical machine using singularly perturbations theory in a direct and easy way. The main contribution of this paper is to obtain the fast and slow bond graphs of the synchronous generator from a linearized bond graph and to verify the models through of simulation results.

Section II gives the bond graph model of a physical system using the junction structure. A nonlinear bond graph model of a synchronous machine is described in section III. A subsection presenting a linearized bond graph of the machine is proposed in section III. The simplified models of the machine applying singular perturbations theory are presented in section IV; where a bond graph of the fast state variables of the machine is obtained. Also, a quasi-steady state bond graph for the slow state variables is presented. Simulation results are shown in section IV. Finally, conclusions are given in section V.

II. Bond Graph Model

Consider the following scheme of a multiport LTI system which includes the key vectors of fig. 1 [9], [10].

Gilberto Gonzalez-A, Faculty of Electrical Engineering, University of Michoacan, Morelia, Michoacan Mexico (e-mail: gilmichga@yahoo.com).
Noe Barrera-Gallegos, Faculty of Electrical Engineering, University of Michoacan, Morelia, Michoacan Mexico (e-mail: noebg20@gmail.com).

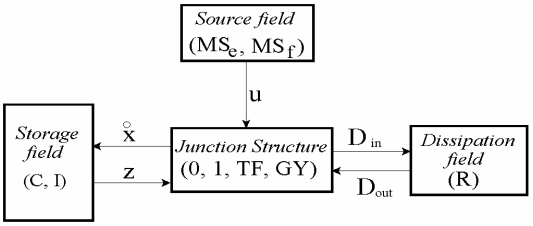

Fig. 1 Key vectors of a bond graph

In fig. 1, *(MS$_e$,MS$_e$)*, *(I,C)* and *(R)* denote the source, the energy storage and the energy dissipation fields, *(D)* the detector and *(0,1,TF,GY)* the junction structure with transformers, *TF*, and gyrators, *GY*.

The state $x \in \Re^n$ is composed of energy variables p and q associated with I and C elements in integral causality, $u \in \Re^p$ denotes the plant input, $y \in \Re^q$ the plant output, $z \in \Re^n$ the co-energy vector, and $D_{in} \in \Re^r$ and $D_{out} \in \Re^r$ are a mixture of e and f showing the energy exchanges between the dissipation field and the junction structure [9], [10]. The relations of the storage and dissipation fields are,

$$z = Fx \tag{1}$$

$$D_{out} = LD_{in} \tag{2}$$

The relations of the junction structure are,

$$\begin{bmatrix} \dot{x} \\ D_{in} \end{bmatrix} = \begin{bmatrix} S_{11} & S_{12} & S_{13} \\ S_{21} & S_{22} & S_{23} \end{bmatrix} \begin{bmatrix} z \\ D_{out} \\ u \end{bmatrix} \tag{3}$$

The entries of S take values inside the set {0, ±1, ±kt, ±kg} where kt and kg are transformer and gyrator modules; S_{11} and S_{22} are square skew-symmetric matrices and S_{12} and S_{21} are matrices each other negative transpose. The state equation is [9], [10]:

$$x = A_p x + B_p u \tag{4}$$

were,

$$A_p = (S_{11} + S_{12} MS_{21})F \tag{5}$$

$$B_p = S_{11} + S_{12} MS_{23} \tag{6}$$

being

$$M = (I - LS_{22})^{-1} L$$

Next section gives a bond graph model of a synchronous generator.

III. A Bond Graph Model of a Synchronous Generator

Synchronous generators form the principal source of electric energy in power systems, many large loads are driven by synchronous motors and synchronous condensers are sometimes used as a means of providing reactive power compensation and controlling voltage. These devices operate on the same principle and are collectively referred to as synchronous machines [1].

It is useful to develop mathematical models of a synchronous machine to explain their electric, magnetic and mechanical behavior. However, a graphical model of a synchronous machine is described in this section, this new model is based on bond graph model.

In this paper, the following assumptions are made for the development of a mathematical and graphical model for a synchronous machine: S_1 : the stator windings are sinusoidally distributed along the air-gap; S_2 : the stator slots cause no appreciable variation of the rotor inductances with rotor position; S_3 : magnetic hysteresis is negligible; S_4 : magnetic saturation effects are negligible.

Consider the representation of a synchronous generator of fig. 2 [1], [2].

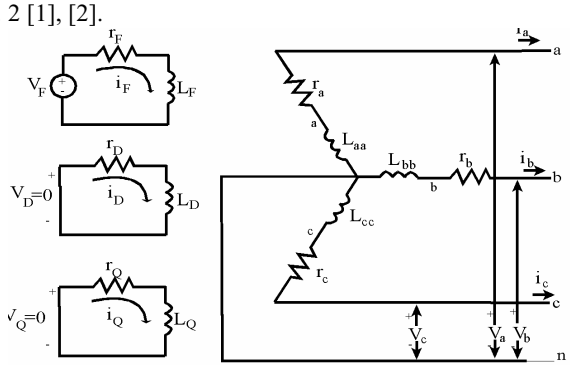

Fig. 2 Schematic diagram of a synchronous generator

In fig. 2, we can identify the following elements:

- *a, b, c*: stator phase windings. So, i_a, i_b, i_c denote the stator phase currents; v_a, v_b, v_c denote the stator phase voltages, r_a, r_b, r_c denote the stator phase resistances and L_{aa}, L_{bb}, L_{cc} denote the stator phase self inductances.
- *F*: field winding with i_F and v_F denote the field current and voltage, respectively; r_F denotes the field resistance and L_F denotes the field self inductance.
- *D*: *d*-axis amortisseur circuit with i_D and v_D denote the amortisseur current and voltage on the d-axis, respectively; r_D denotes the amortisseur resistance on the *d*-axis and L_D denotes the amortisseur self inductance on the *d*-axis.
- *Q*: *q*-axis amortisseur circuit with i_Q and v_Q denote the amortisseur current and voltage on the q-axis, respectively; r_Q denotes the amortisseur resistance on the q-axis and L_Q denotes the amortisseur self inductance on the *q*-axis.

The synchronous generator of fig. 2, is represented by six windings are magnetically coupled. The magnetic coupling between the windings is a function of the rotor position. The instantaneous terminal voltage *v* of any winding is in the form,

$$v = \pm \sum ri \pm \dot{\lambda} \tag{7}$$

where λ is the flux linkage, *r* is the winding resistance and *i* is the current with positive directions of stator currents flowing out of the generator terminals.

A great simplification in the mathematical description of the synchronous machine is obtained from the Park's transformation. The effect of Park's transformation is simply to

transform all stator quantities from phases *a*, *b* and *c* into new variables the frame of reference of which moves with the rotor. Thus by definition [1].

$$i_{odq} = P i_{abc} \tag{8}$$

where the current vectors are defined as,

$$i_{0dq} = \begin{bmatrix} i_0 & i_d & i_q \end{bmatrix}^T \tag{9}$$

$$i_{abc} = \begin{bmatrix} i_a & i_b & i_c \end{bmatrix}^T \tag{10}$$

and the Park's transformation is,

$$P = \sqrt{\frac{2}{3}} \begin{bmatrix} 1/\sqrt{2} & 1/\sqrt{2} & 1/\sqrt{2} \\ \cos\theta & \cos\left(\theta - 2\pi/3\right) & \cos\left(\theta + 2\pi/3\right) \\ \sin\theta & \sin\left(\theta - 2\pi/3\right) & \sin\left(\theta + 2\pi/3\right) \end{bmatrix} \tag{11}$$

The angle between the *d* axis and the rotor is given by,

$$\theta = \omega_R t + \delta + \pi/2 \tag{12}$$

Where ω_R is the rated angular frequency in rad/s and δ is the synchronous torque angle in electrical radians.

Similarly, to transform the voltages and flux linkages,

$$v_{0dq} = P v_{abc} \tag{13}$$

$$\lambda_{0dq} = P \lambda_{abc} \tag{14}$$

In according with fig. 2, we described the bond graph model of the synchronous machine on *d*-*q* axis, in fig. 3 that satisfies the conditions $S_1 - S_4$ of this section. This bond graph is different respect to [11] on the directions of the bonds 14, 15, 17 and 19, and we use a voltage source on the exciting winding.

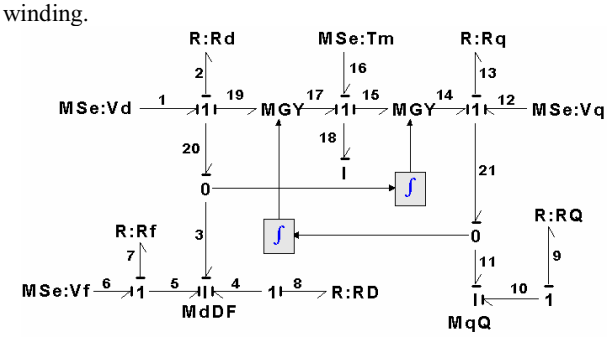

Fig. 3. Bond graph model of a synchronous generator.

In fig. 3, T_m is the mechanical torque, T_j is the moment of inertia, *D* is the damper coefficient, $I{:}M_{dDF}$ and $I{:}M_{Qq}$ are the magnetic coupling between self and mutual inductances of the windings on *d*-axis and on *q*-axis, respectively.

The key vectors of the bond graph of fig. 3 for the storage field are,

$$\begin{aligned} x &= \begin{bmatrix} p_3 & p_4 & p_5 & p_{10} & p_{11} & p_{18} \end{bmatrix}^T \\ \dot{x} &= \begin{bmatrix} e_3 & e_4 & e_5 & e_{10} & e_{11} & e_{18} \end{bmatrix}^T \\ z &= \begin{bmatrix} f_3 & f_4 & f_5 & f_{10} & f_{11} & f_{18} \end{bmatrix}^T \end{aligned} \tag{15}$$

and for the dissipation field,

$$\begin{aligned} D_{in} &= \begin{bmatrix} f_2 & f_7 & f_8 & f_9 & f_{13} & f_{20} \end{bmatrix}^T \\ D_{out} &= \begin{bmatrix} e_2 & e_7 & e_8 & e_9 & e_{13} & e_{20} \end{bmatrix}^T \end{aligned} \tag{16}$$

The constitutive relations of the bond graph model of fig. 3 are,

$$L = diag\left\{r_d, r_F, r_D, r_Q, r_q, D\right\} \tag{17}$$

$$F^{-1} = diag\left\{M_{dDF}, M_{Qq}, T_j\right\} \tag{18}$$

were

$$M_{dDF} = \begin{bmatrix} L_d & M_{dD} & M_{dF} \\ M_{dDF} & L_D & M_{DF} \\ M_{dF} & M_{DF} & L_F \end{bmatrix} \tag{19}$$

$$M_{qQ} = \begin{bmatrix} L_Q & M_{qQ} \\ M_{qQ} & L_q \end{bmatrix} \tag{20}$$

A. A Linear Bond Graph of a Synchronous Generator

By neglecting the amortisseur circuits *D* and *Q*, i.e. removing the bonds 4, 8, 9 and 10 and applying the procedure to linearize the nonlinear bond graph of the synchronous machine [14] of fig. 3, a linearized bond graph of the synchronous machine is shown in fig. 4.

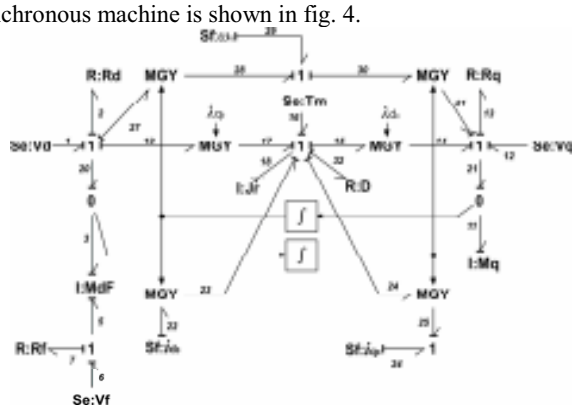

Fig. 4. Linearized bond graph.

The state equation of the linearized system is given by,

$$x_\delta = A_\delta x_\delta + B_\delta u_\delta$$

were,

$$A_\delta = (S_{11}^x + S_{11}^0 + S_{12} M S_{21}) F + S_{13}^1$$

$$B_\delta = S_{13}^x + S_{12} M S_{23}$$

with the junction structure of the linearized bond graph,

$$\begin{bmatrix} \dot{x}_\delta \\ D_{in} \end{bmatrix} = \begin{bmatrix} S_{11}^x + S_{11}^0 & S_{12} & S_{13}^x & S_{13}^0 \\ S_{12} & S_{22} & S_{23} & 0 \end{bmatrix} \begin{bmatrix} z_\delta \\ D_{out} \\ u_\delta \\ \tilde{u} \end{bmatrix}$$

and

$$S_{13}^{0}\tilde{u} = S_{13}^{1}x_{\delta}$$

The junction structure of the linearized bond graph is.

$$S_{11}^{0} = \begin{bmatrix} 0_{3x3} & -h_1^T \\ h_1 & 0 \end{bmatrix};\ S_{13}^{0} = \begin{bmatrix} 0_{3x3} & -h_2^T \\ h_2 & 0 \end{bmatrix}$$

$$h_1 = \begin{bmatrix} \tilde{\lambda}_{qo} & 0 & -\tilde{\lambda}_{do} & 0 \end{bmatrix} \text{ and } h_2 = \begin{bmatrix} \lambda_q & 0 & -\lambda_d & 0 \end{bmatrix}$$

The state equation of the linearized synchronous generator is given by,

$$A_{\delta} * F^{-1} = \begin{bmatrix} -r_d & -M_{DF} & -L_F\omega_0 & -L_q\lambda_{q0} \\ 0 & -r_F & 0 & 0 \\ T_j\omega_0 & 0 & -r_q & L_d\lambda_{d0} \\ -T_j a_1 & M_{DF}a_2 & L_F & -D \end{bmatrix}$$

$$B_{\delta} = I_3,\ a_1 = i_{q0} - \lambda_{q0} \text{ and } a_2 = i_{d0} - \lambda_{d0}.$$

A bond graph allows to reduce a model by removing some of their bonds of the system. In the next section, some simplified models of a synchronous machine using singularly perturbations theory are obtained.

IV. A Singularly Perturbed Synchronous Generator

In previous section a mathematical model with six nonlinear differential equations of the bond graph of a synchronous machine can be found. Thus, the complete mathematical description of a large power system is exceedingly complex, and simplifications are often used in modeling the system. By using a bond graph the reduced models can be directly obtained. Because it is necessary to eliminate the respective bonds to neglect some part of the model.

The singular perturbation model of finite dimensional dynamic systems, extensively studied in the mathematical literature by Tikhonov (1948,1952), Levinson (1950), Vasil'eva (1963), Wasow (1965), O'Malley (1971), etc. was also the first model to used in control and systems.

Linear time invariant models are of interest in local or small signal approximations of more realistic nonlinear models of dynamic systems [13], [14]. Consider a LTI system to study two time scale properties of the following form,

$$\dot{x}_1 = A_{11}x_1 + A_{12}x_2 + B_1u,\ x_1 \in \Re^n \tag{21}$$

$$\varepsilon\dot{x}_2 = A_{21}x_1 + A_{22}x_2 + B_2u,\ x_2 \in \Re^m \tag{22}$$

The slow reduced model is obtained by setting $\varepsilon = 0$ in (22) then,

$$x_{2s} = -A_{22}^{-1}A_{22}x_{1s} - A_{22}^{-1}B_2u_s \tag{23}$$

substituting (23) into (21) we have,

$$\dot{x}_{1s} = \left(A_{11} - A_{12}A_{22}^{-1}A_{21}\right)x_{1s} + \left(B_1 - A_{12}A_{22}^{-1}B_2\right)u_s \tag{24}$$

The fast reduced model is obtained by introducing the fast time scale $\eta=(t-t_0)/\varepsilon$ in (21) and (22). x1f, x2f, uf denote the fast parts of variables x_1, x_2 and u.

A. Decoupling Fast Dynamic Behavior

According to [14] there is a condition for decoupling fast and slow behavior from a singularly perturbed system which is the invertibility of A_{22} associated with the fast part of the system. For decoupling the fast behavior we can apply one of the next two procedures proposed by [14] for the case when a bond graph model has C or I elements of different order of magnitude and R elements of the same order of magnitude (Procedure 1) and when a bond graph model has R elements of different order of magnitude and C or I elements of the same order of magnitude (Procedure 2).

Procedure 1

The fast reduced bond graph is deduced from the global one by suppressing:

- All the C or I elements with large modulus.
- All the R elements causally connected with these C or I elements directly or indirectly through other R elements.
- All the input sources having no causal connection with the remaining C, I and R elements.

Procedure 2

The fast reduced bond graph is deduced from the global one by suppressing:

- All the C elements causally connected with large valued R elements or large valued R elements in the case of an algebraic loop.
- All the R elements without causal connection with the remaining C, I or R directly or indirectly through other R elements.
- All the input sources having no causal connection with the remaining C or I directly or indirectly through other R elements.

In the case of linearized bond graph of synchronous generator, we have I elements with the same order of magnitude and R elements with different then it is possible to apply Procedure 2 and the fast reduced part of the bond graph is shown in Fig. 5.

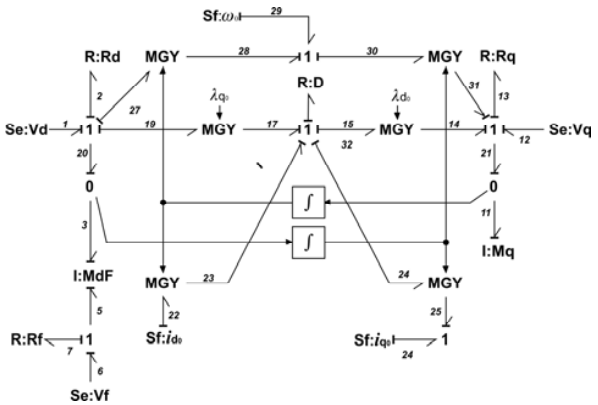

Fig. 5 Bond graph of fast reduced part

Simulation results of the fast state variables using the bond graph model of Fig. 5, and variables of the linearized bond graph of Fig. 3 are obtained. The numerical parameters of the synchronous generator are: $M_q=1.64H$, $L_d=1.7H$, $L_F=1.65H$, MdF=1.55H, Rd=0.1Ω, Rf=1Ω, Rq=2Ω, Jr=12.37N· m· s², D=1N· m· s, Vq=1.2246V, Vd=0, Vf=30V and Tm=100N· m. Hence, electrical currents on d and q-axis are shown in Fig. 6 and 7, where I_{dL} and I_{qL} are the electrical current of the linearized bond graph on *d* and *q*-axis, respectively, and I_{dLF} and I_{qLF} are the electrical currents of the fast bond graph on d and *q*-axis, respectively.

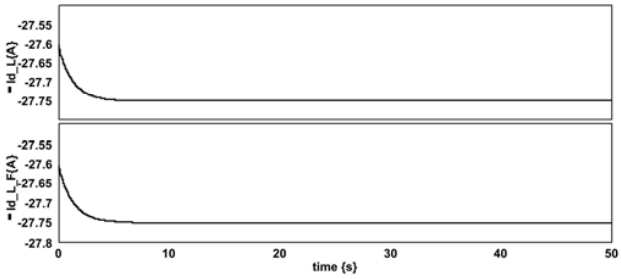

Fig. 6 Electrical current on d-axis

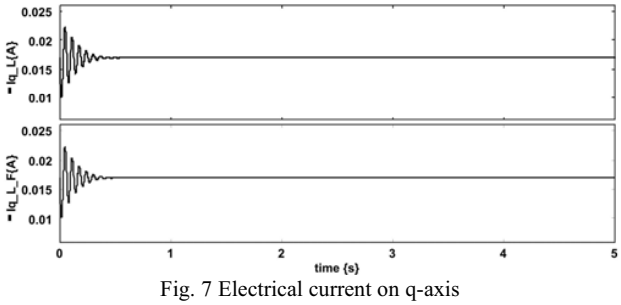

Fig. 7 Electrical current on q-axis

Fig. 8 shows electrical current on the field winding.

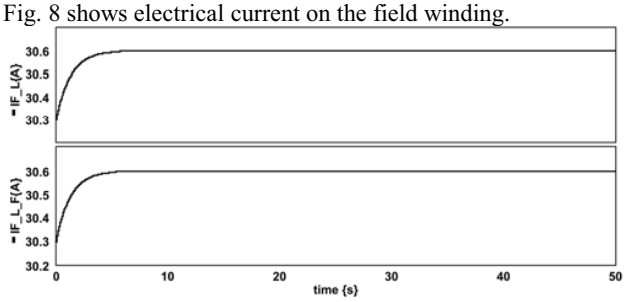

Fig. 8 Electrical current on the field winding

We can verify that the performance of the fast variables using the linearized bond graph and the simplified fast bond graph are similar having the same steady state response.

B. Quasi-Steady State

For the slow part and so called "quasi" steady state of the system we apply a different procedure which proposes to assign derivative causality to storage elements that represent the fast states and the storage elements of slow states maintain an integral causality assignment. Fig. 9 shows the bond graph to determine the quasi-steady state.

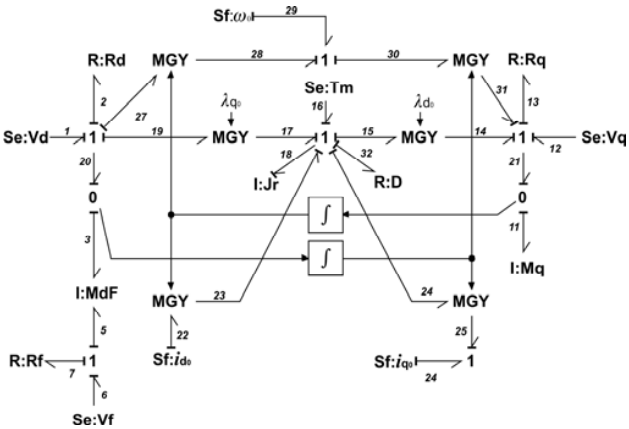

Fig. 9 Quasi-steady state bond graph

The junction structure of the quasi-steady state bond graph is defined by,

$$\begin{bmatrix} \dot{x}_1 \\ z_2 \\ D_{in}^h \end{bmatrix} = \begin{bmatrix} H_{11}^{11} & H_{11}^{12} & H_{12}^{11} & H_{13}^{11} & H_{14}^{11} \\ H_{11}^{21} & H_{11}^{22} & H_{12}^{21} & H_{13}^{21} & H_{14}^{21} \\ H_{21}^{11} & H_{21}^{12} & H_{22} & H_{23} & H_{24} \end{bmatrix} \begin{bmatrix} z_1 \\ \dot{x}_2 \\ D_{out}^h \\ u \\ w \end{bmatrix} \quad (25)$$

where $D_{out}^h = L^h D_{in}^h$. Thus, the quasi-steady state model is,

$$\dot{\bar{x}} = \dot{A}_{11}\dot{\bar{x}} + \dot{B}_1\dot{u} \quad (26)$$

with

$$\dot{A}_{11} = \left(H_{11}^{11} + H_{12}^{11} Q H_{21}^{11}\right) F_1 \quad (27)$$

$$\dot{B}_1 = H_{13}^{11} + H_{12}^{11} Q H_{23} \quad (28)$$

$$Q = L^h (I - H_{22} L^h)^{-1} \quad (29)$$

In order to compare the simulation results of the angular velocity of the quasi-steady state bond graph model (W_L_S) with linearized bond graph (W_L), fig. 9 shows the performance of the both variables indicating that are similar.

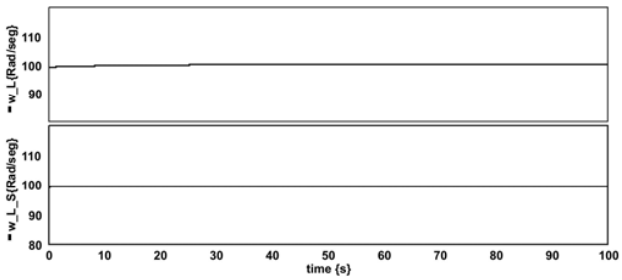

Fig. 9 Angular velocity of the quasi-steady state and linearized state

Fig. 10 compares the behavior of the angular velocity of the nonlinear bond graph respect to linearized bond graph models showing that effectively the angular velocity is a slow state variable.

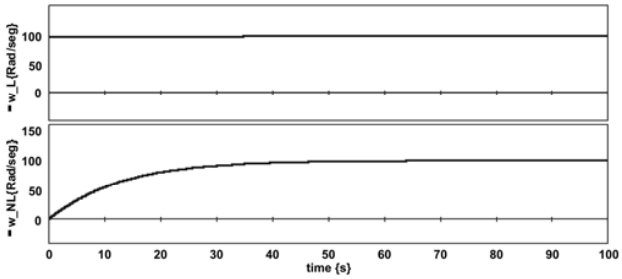

Fig. 10 Angular velocity of the nonlinear and linearized bond graphs

Note that the bond graph methodology with singular perturbations theory allows to have a graphical tool decoupling state variables with fast and slow dynamics in a direct manner.

V. Conclusions

This work describes a nonlinear bond graph model of a synchronous machine. Also, the linearized bond graph of the machine is proposed. In order to disconnect the state variables of a LTI system with two time scale the singular perturbations theory to bond graph methodology is applied. Hence, a bond graph of fast state variables of the synchronous machine is proposed. Also, a bond graph of the slow state variables of the machine is presented. Simulation results of the synchronous generator using nonlinear, linearized, fast and slow bond graphs models are shown.

References

[1] P. M. Anderson, "Power System Control and Stability", The IOWA State University Press, (1977).
[2] P. Kundur, "Power System Stability and Control" Mc.Graw-Hill, (1994).
[3] John R. Smith, Meng-Jen Chen "Three-Phase Electrical Machine Systems Computer Simulation", John Wiley & Sons Inc., (1993).
[4] Kamwa, R. Wamkeue, X. Dai-Do, "General approaches to efficient d-q simulation and model translational for synchronous machines : a recap", Electric Power Systems Research Vol. 42, pp.173-180, 1997.
[5] Milenko Duric, Zoran Radojevic, Emilija Turkovic, "A practical approach to the order reduction of a power system model for small stability analysis", Electric Power System Research, vol. 41, pp. 13-18, 1997.
[6] M. Saidy and F. M. Hughes, "An extended block diagram transfer function model of a synchronous machine", Electrical Power & Energy Systems, Vol. 18, No.2 pp. 139-142, 1996.
[7] Paynter, H. M., "Analysis and Design of engineering systems", MIT Press, Cambridge, Mass (1961).
[8] Dean C. Karnopp, Ronald C. Rosenberg, "System Dynamics: A Unified Approach", Wiley, John & Sons, April (1975).
[9] P.E. Wellstead, "Physical System Modelling", Academic Press, London, (1979).
[10] C. Sueur, G. Dauphin-Tanguy, "Bond graph approach for structural analysis of MIMO linear systems", J. Flanklin Inst., Vol. 328, No.1 pp. 55-70, (1991).
[11] Dietrich Sahm, "A Two-Axis, Bond Graph Model of the Dynamics of Synchronous Electrical Machine", J. Flanklin Inst., Vol. 308, No.3 pp. 205-218, (1979).
[12] Dean Karnopp "State Functions and Bond Graph Dynamic Model Rotary, Multi-winding Electrical Machines", J. Flanklin Inst., Vol 328, No. 1, pp 45-54, (1991).
[13] P. V. Kokotovic, H. K. Khalil and J. O'Reilly, "Singular Perturbation Methods in Control: Analysis and Design", Academic Press, 1986.
[14] C. Sueur and G. Dauphin-Tanguy, "Bond Graph Approach to Multi-time Scale Systems Analysis", J. Franklin Inst., Vol. 328, No. 5/6, pp. 1005-1026, 1991.