International Journal of Earth, Energy and Environmental Sciences
ISSN: 2517-942X
Vol:10, No:2, 2016

Nonlinear Finite Element Modeling of Deep Beam Resting on Linear and Nonlinear Random Soil

M. Seguini, D. Nedjar

***Abstract*—**An accuracy nonlinear analysis of a deep beam resting on elastic perfectly plastic soil is carried out in this study. In fact, a nonlinear finite element modeling for large deflection and moderate rotation of Euler-Bernoulli beam resting on linear and nonlinear random soil is investigated. The geometric nonlinear analysis of the beam is based on the theory of von Kàrmàn, where the Newton-Raphson incremental iteration method is implemented in a Matlab code to solve the nonlinear equation of the soil-beam interaction system. However, two analyses (deterministic and probabilistic) are proposed to verify the accuracy and the efficiency of the proposed model where the theory of the local average based on the Monte Carlo approach is used to analyze the effect of the spatial variability of the soil properties on the nonlinear beam response. The effect of six main parameters are investigated: the external load, the length of a beam, the coefficient of subgrade reaction of the soil, the Young's modulus of the beam, the coefficient of variation and the correlation length of the soil's coefficient of subgrade reaction. A comparison between the beam resting on linear and nonlinear soil models is presented for different beam's length and external load. Numerical results have been obtained for the combination of the geometric nonlinearity of beam and material nonlinearity of random soil. This comparison highlighted the need of including the material nonlinearity and spatial variability of the soil in the geometric nonlinear analysis, when the beam undergoes large deflections.

***Keywords*—**Finite element method, geometric nonlinearity, material nonlinearity, soil-structure interaction, spatial variability.

I. Introduction

IN the context of soil-structure interaction analysis, most of the structures modeled as beam element where the beam resting on foundation have found wide applications in practical engineering structures (pipelines, piles, railway… etc.). In fact, the importance of understanding the effect of the soil–structure interaction and the behavior of a beam on foundation has motivated a number of recent studies [1]-[6]. Hetenyi [1] and Timoshenko [2] were the first to attempt prediction of the response of beam on foundation using a simplified analytical method and a Winkler soil's model [7]. However, several authors widely used the exact stiffness matrix developed by [8] in the finite element analysis of beam resting on Winkler soil [9]. Various constitutive models of beam resting on nonlinear soil [9]-[12] have been suggested by different researchers to analyze the nonlinear soil behavior on the beam response. Beaufait and Hoadley [10] presented a finite difference methodology to simulate beam behavior resting on elastic soil. Other researchers have also carried out an experimental works and dynamic analysis of beam resting on different soil model [13]-[17]. In addition, for the analysis of soil-structure interaction problems, many models of geometric nonlinear beam on foundation, based on the updated and total Lagrangian formulation [18] and on the von Kàrmàn theory [19] have been developed by various researchers. Hosseini Kodkheili and Bahai [20] have advocated the use of updated lagrangian formulation developed by [18] for the geometric nonlinear static analysis of a pipe. The same formulation was also used for the dynamic nonlinear analysis of a 3D flexible riser [21]. Horibe [22] used the boundary integral equation method to analyze the geometric nonlinear response of a beam on foundation. Notably a new semi-analytical approach for a geometric linear and nonlinear analysis of beam resting on linear and nonlinear foundation and based on the Euler-Bernoulli von Kàrmàn theory have been presented by [23]-[25]. Al-Azzawi, Mahdy and Farhan [26] developed a finite element model utilizing the Ansys software to study the nonlinear behavior of beam resting on linear and nonlinear Winkler soil. The results were compared to those obtained by [27] which used a finite element and difference method to analyze the nonlinear response of Timoshenko beam on elastic foundation. In [28], finite and difference element methods were also used to analyze the large deflection of a deep beam resting on elastic soil; in fact, the effect of the variation of the coefficient of soil's subgrade reaction and beam depth to length ration on the nonlinear beam response was also studied. Furthermore, most of the studies are restricted to analyze a very simple model of linear and nonlinear beam resting on homogeneous soil without taking into account the spatial variability of the soil properties. In fact, recently it was pointed out that the probabilistic analysis of beam on foundation by taking account the spatial variability of soil's properties is very important to determine the realistic behavior of the structure in the case of soil-structure interaction [29]. Moreover, early work on the study of the behavior of the buried pipe modeled as beam are concentrated on the effect of the spatial variability of the soil properties on beam response. Elachachi, Breysse and Houy [30] used a finite element probabilistic approach based on the theory of VanMarcke [31] to quantify the effect of the spatial variability of soil properties on the pipe response. In the same context, a dynamic analysis of beam resting on random soil

M. Seguini, PhD student, is with the University of Science and Technology of Oran Mohamed Boudiaf, BP 1505 Oran, Algeria, Faculty of Architecture and Civil Engineering, Department of Civil Engineering, Laboratory of Mechanic of Structures and Stability of Construction LM2SC (phone: +213550629188; e-mail: seguinimeriem@ yahoo.fr).

D. Nedjar, Professor, is with the University of Science and Technology of Oran Mohamed Boudiaf, BP 1505 Oran, Algeria, Faculty of Architecture and Civil Engineering, Department of Civil Engineering, Laboratory of Mechanic of Structures and Stability of Construction LM2SC (e-mail: djamel_nedjar@ yahoo.fr).

was carried out by [32]-[34]. Elachachi, Breyess and Denis [35] studied also the effect of the spatial variability of the soil properties on the behavior of a buried pipe, where the modified Vlassov model of soil is used in the analysis. In contrast, very few researches deal with the nonlinear beam resting on nonlinear material random soil. Recently, a finite difference method was developed to study the nonlinear behavior of the pipeline resting on spatially random elastic perfectly plastic soil [36] where the significant effect of the correlation length of soil's subgrade reaction on the pipe response was shown through a numerical example.

This paper attempts to compare various new models of beam resting on linear and nonlinear foundations and suggest a suitable one. In fact, the finite element formulation based on the Euler-Bernoulli von Kàrmàn assumption to analyze the large deflection of the geometric nonlinear beam resting on elastic linear and elastic perfectly plastic soil is used in this study. Particular attention is focused on assessing the effect of different properties on the response of the structure: the length of beam, the external load, the Young modulus of the beam and the spatial variability of soil's properties such as the coefficient of variation and the correlation length. The validity and efficiency of the proposed model are shown by using the numerical example developed by [28].

The obtained results show that the spatial variability of soil's properties has a direct impact on the overall accuracy of the analysis. Therefore, it is expected that the developed model that take into account the geometric nonlinearity of beam combined to material nonlinearity and spatial variability of the soil furnishes a more realistic behavior of the beam.

II. Theory And Formulation

A. Constitutive Relation for Geometric Nonlinear Beam Resting on Linear and Nonlinear Soil

Considering a section of a beam subjected to a distributed load as shown in Fig. 1, where $u_0(x)$ and $w_0(x)$ are the axial and the transverse displacement of the point G of the chosen beam segment respectively. Due to the deformation of the beam, equilibrium equation can be defined. In fact, under the assumptions of the Euler–Bernoulli beam based on the von Kàrmàn theory, the following differential equation can be obtained:

$$EI\frac{d^4w_0}{dx^4}-\frac{3}{2}EA\left(\frac{dw_0}{dx}\right)^2\left(\frac{d^2w_0}{dx^2}\right)^2=q(x) \tag{1}$$

where E and I are the Young modulus and the inertia of the beam respectively.

By considering the mechanism of the soil-beam interaction, the differential equation is written as:

$$EI\frac{d^4w_0}{dx^4}-\frac{3}{2}EA\left(\frac{dw_0}{dx}\right)^2\left(\frac{d^2w_0}{dx^2}\right)^2+p(x)=q(x) \tag{2}$$

where $p(x)$ is the reaction of the soil, which is expressed as:

$$p(x)=b.k_{soil}.w_0(x) \tag{3}$$

Noting that k_{soil} is the subgrade reaction of the soil and b is the width of the beam. Hence, the total potential energy functional and the principal of virtual works are used to solve (2).

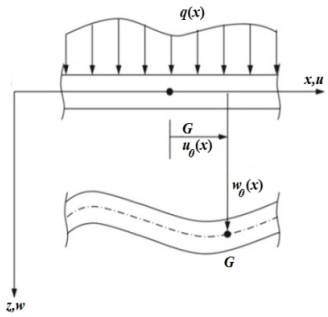

Fig. 1 Deformed beam element segment showing displacements

B. Derivation of the Stiffness Matrix of the Considered Numerical Model

The strain energy Ψ of the beam-soil interaction system is obtained by the summation of the strain energy of the beam Ψ_1 and the soil Ψ_2 as:

$$\psi=\psi_1+\psi_2 \tag{4}$$

The polynomial displacement function $w_0(x)$ of a beam element is given by:

$$w_0(x)=[N]^t.\{\Delta^e\} \tag{5}$$

with

$$\{\Delta^e\}=\{w_1;\theta_1;w_2;\theta_2\} \tag{6}$$

N is the interpolation function's vector and $\{\Delta^e\}$ is the vector of nodal displacement of a two nodes element. However, the axial displacement, u, and the vertical displacement, w, of the beam element can be expressed as:

$$u(x,z)=u_0(x)-z\frac{dw_0(x)}{dx} \tag{7}$$

$$w(x,z)=w_0(x) \tag{8}$$

Consider the nonlinear strain-displacement relationship for the von Kàrmàn formulation written as:

$$\varepsilon_{xx}=\varepsilon_{xx}^0+z\varepsilon_{xx}^1 \tag{9}$$

$$\varepsilon_{xx}^0=\frac{du_0}{dx}+\frac{1}{2}\left(\frac{dw_0}{dx}\right)^2,\quad \varepsilon_{xx}^1=-\frac{d^2w_0}{dx^2} \tag{10}$$

where ε_{xx} and ε_{xx}^0 are the longitudinal and the nonlinear strain respectively and ε_{xx}^1 is the curvature of the beam element.

The internal axial force N_{xx} and the bending moment M_{xx} are determined by [19] and are expressed as:

$$N_{xx} = A_{xx}^{e}\left[\frac{du_0}{dx} + \frac{1}{2}\left(\frac{dw_0}{dx}\right)^2\right] \tag{11}$$

$$M_{xx} = B_{xx}^{e}\left[\frac{du_0}{dx} + \frac{1}{2}\left(\frac{dw_0}{dx}\right)^2\right] - D_{xx}^{e}\left(\frac{d^2w_0}{dx^2}\right) \tag{12}$$

Note that A_{xx}^{e}, B_{xx}^{e} and D_{xx}^{e} are the extensional bending and flexural rigidity of a beam element respectively and they are defined as:

$$(A_{xx}^{e}, B_{xx}^{e}, D_{xx}^{e}) = \int_0^{l_e} E(1, z, z^2)dx \tag{13}$$

where $A_{xx}^{e} = EA$, $B_{xx}^{e} = 0$ and $D_{xx}^{e} = EI$.

The strain energy of the beam Ψ_1 is expressed as:

$$\psi_1 = \frac{1}{2}\int_0^{l_e}(N_{xx}\varepsilon_{xx}^{0} + M_{xx}\varepsilon_{xx}^{1})dx \tag{14}$$

By introducing (9)-(12) into (14), the strain energy of the beam can be expressed as:

$$\psi_1 = \frac{1}{2}\int_0^{l_e}\left\{EA\left[\frac{du_0}{dx} + \frac{1}{2}\left(\frac{dw_0}{dx}\right)^2\right]^2 + EI\left(\frac{d^2w_0}{dx^2}\right)^2\right\}dx \tag{15}$$

The derivative of axial displacement $\frac{du_0}{dx}$ is assumed to be small, therefore it can be neglected and (15) can be written as:

$$\psi_1 = \frac{1}{2}\int_0^{l_e}\left\{EA\left[\frac{1}{2}\left(\frac{dw_0}{dx}\right)^2\right]^2 + EI\left(\frac{d^2w_0}{dx^2}\right)^2\right\}dx \tag{16}$$

Noting that b is the width of the beam and k_{soil} is the coefficient of subgrade reaction of the soil.

$$\psi_1 = \frac{1}{2}\int_0^{l_e}\left\{EA\left[\frac{1}{2}\left(\frac{dw_0}{dx}\right)^2\right]^2 + EI\left(\frac{d^2w_0}{dx^2}\right)^2\right\}dx \tag{17}$$

$$\psi_1 = \frac{1}{2}\{\Delta^e\}^t\left\{\left[\frac{1}{2}EA\int_0^{l_e}\left(\frac{dw_0}{dx}\right)^2\left(\frac{dN}{dx}\right)\left(\frac{dN}{dx}\right)^t dx\right] + \left[EI\int_0^{l_e}\left(\frac{d^2N}{dx^2}\right)\left(\frac{d^2N}{dx^2}\right)^t dx\right]\right\}\{\Delta^e\} \tag{18}$$

$$\psi_1 = \frac{1}{2}\{\Delta^e\}^t\left[K_{bnl}^{e}\{\Delta^e\} + K_{bl}^{e}\right]\{\Delta^e\} \tag{19}$$

where K_{bl}^{e} and K_{bnl}^{e} are the linear and nonlinear matrices of rigidity of a beam element respectively. Hence, the strain energy of the soil Ψ_2 is defined as:

$$\psi_2 = \frac{1}{2}\int_0^{l_e} b.k_{soil}.w_0(x).w_0(x)dx \tag{20}$$

$$\psi_2 = \frac{1}{2}\{\Delta^e\}^t\left(b.k_{soil}\int_0^{l_e}\{N\}.\{N\}^t dx\right)\{\Delta^e\} \tag{21}$$

$$\psi_2 = \frac{1}{2}\{\Delta^e\}^t\left[K_s^e\right]\{\Delta^e\} \tag{22}$$

where K_s^e is the matrix of rigidity of the soil.

For the case of nonlinear analysis of the elastic perfectly plastic soil model, the coefficient of soil's subgrade reaction k_{soil} for and element e is:

$$\begin{cases} p_e = k_{soil}\, w_e & 0 \le w_e \le s_u \\ p_e = p_u & w_e \succ s_u \end{cases} \tag{23}$$

Here P_u signifies the ultimate subgrade reaction and S_u the soil yield displacement.

The virtual works is then written as:

$$\delta(\psi + V) = 0 \tag{24}$$

with

$$V = -W_{ext} = \int_0^{l_e} q(x)w_0 dx \tag{25}$$

$$V = \int_0^{l_e}\{\Delta^e\}.\{-q\}.[N]^t dx \tag{26}$$

where W_{ext} is the external virtual work.

By substituting (19) and (22) into (4), we obtain the total strain energy Ψ which is expressed as:

$$\psi = \left(\frac{1}{2}\{\Delta^e\}^t\left[K_{bl}^{e} + K_{bnl}^{e}\{\Delta^e\}\right]\{\Delta^e\}\right) + \left(\frac{1}{2}\{\Delta^e\}^t\left[K_s^e\right]\{\Delta^e\}\right) \tag{27}$$

Finally, by using (27) and (26) into (24), the incremental equation of equilibrium is obtained as:

$$[K^e]\{\Delta^e\}^{i+1} = \{F\} \tag{28}$$

$$\{\Delta^e\}^{i+1} = \{\Delta^e\}^{i} + \{\delta\Delta\} \tag{29}$$

Equation (28) is solved by using the Newton-Raphson iterative method, which is implemented in a Matlab code, where {F} is the element force vector and $[K^e]$ is the element rigidity matrix, which expressed as:

$$K^e = K_{bl}^{e} + K_{bnl}^{e}\{\Delta^e\}^i + K_s^e \tag{30}$$

III. Spatial Variability Modelling

Due to the deposition and the aggregation process of soil medium, a complex heterogeneous soil results with a various source of uncertainty of its properties. In fact, in the geotechnical analysis it is very difficult to define the actual behavior of soil and its effect on the structure response without taking into account the spatial variability of soil properties. However, the analysis herein presented is performed in the context of a beam-soil interaction model, characterized by the following noteworthy features: (a) geometric nonlinear beam; (b) nonlinear elastic perfectly plastic soil; (b) heterogeneous random soil. Therefore, the local average theory developed by [31] is combined to Monte Carlo simulations and used in this analysis, where the random soil is subdivided into several zones. It is characterized by a fixed mean m_k, a variance σ_k^2 various coefficient of variation and correlation length L_c which describes the distance over which the correlation between soil properties tends to disappear. The coefficient of soil's subgrade reaction k_{soil} is characterized by a lognormal distribution and its local average is given by:

$$E[k_{soil}(D_i)] = m_k \tag{32}$$

where the variance of k_{soil} is defined for each zone (i) of length D_i as:

$$Var[k_{soil}(D_i)] = \sigma_k^2 \gamma(D_i) \tag{33}$$

$\gamma(D_i)$ is the variance function [30]. It depends on the spatial correlation function $\rho(x)$ and is determined by [31] as:

$$\gamma(D_i) = \frac{2}{D_i}\int_0^{D_i}(1-\frac{x}{D_i})\rho(x)dx \tag{34}$$

with

$$\rho(\tau) = 1-\frac{|\tau|}{L_c} \quad \text{for} \quad |\tau| \le L_c \tag{35}$$

The variance function is obtained in a discrete formulation by introducing (34) into (33):

$$\gamma(D_i) = \begin{cases} 1-\dfrac{D_i}{3L_c} & if \quad D_i \le L_c \\ \dfrac{L_c}{D_i}\left(1-\dfrac{L_c}{3D_i}\right) & if \quad D_i \succ L_c \end{cases} \tag{36}$$

Finally, we used the local average subdivision method developed by [37] to generate the random variable and compute the covariance matrix C_{ij} of the coefficient of soil's subgrade reaction.

$$C_{ij} = Cov\left[k_{soil}(D_i), k_{soil}(D_j)\right] \tag{37}$$

$$C_{ij} = \frac{\sigma_k^2}{2}\left\{(t-1)^2\gamma[(t-1)D] - 2t^2\gamma[t.D] + (t+1)^2\gamma[(t+1)D]\right\} \tag{38}$$

$t=|i - j|$ is the difference between two spatial zones (i) and (j) in absolute value with same length (in our case $D=D_i=D_j$)

IV. Numerical Study

On the basis of the formulations presented in the previous sections, a Matlab program has been written and representative example has been presented to show the efficiency of the developed model trough deterministic and probabilistic analysis. However, the nonlinear analysis of a simply supported beam subjected to a distributed load and resting on linear and nonlinear soil as shown in Fig. 2 is examined. Different beam lengths, external loads, Young modulus of the beam and coefficients of subgrade reaction of the soil were taken into account. The properties of the beam and the soil are presented in Table I

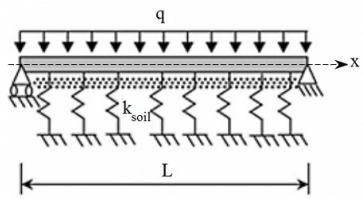

Fig. 2 Beam resting on elastic soil and subjected to a uniform distributes load q

TABLE I
Beam and Soil Properties

Symbol	Parameters	Range of values	Unit
b	Width of beam	0.4	m
h	Height of beam	0.8	m
L	Length of beam	2, 9, 15	m
E_b	Beam Elastic Young modulus	25.10^6	kN/m^2
υ	Poisson ration of beam	0.15	(-)
k_{soil}	Coefficient of soil's subgrade reaction	10000	kN/m^3
S_u	Yield displacement of soil	1	mm
P_u	The ultimate subgrade reaction	2.5	kN/m^2
L_c	Correlation length of soil	2,4,6	m
Cv	Coefficient of variation of soil	50,70,100	%
q	Applied load	25, 125,250	kN/m^2

A. Deterministic Analysis

In this section, a deterministic analysis of soil-beam interaction system has been done to verify the efficiency of the developed model. However, the obtained results from this analysis were resumed in Table II and compared to those available in the literature [28]. It is seen that the results are in a good agreement especially when the beam is discretized in a great number of beam elements (N_e = 25).

Tables III and IV list the maximum deflection and bending moment of nonlinear beam resting on linear and nonlinear soil respectively, for different values of applied load and beam length. It is observed that the maximum deflection and bending moment increased with the increase of the applied load p and beam length when the beam is resting on nonlinear

soil. In contrast, for the beam resting on linear soil, the maximum deflection increased but the bending moment decreased (L=15m). It is also observed that there is a little difference between the obtained results from the nonlinear analysis of beam resting on linear soil and the nonlinear analysis of beam resting on nonlinear soil, in the case of a beam having a smallest length L=2m and even if the applied load increases. Furthermore, it is interesting to note that the effect of the nonlinear behavior of soil on the response of the beam appear when the beam has a considerable length.

TABLE II
MAXIMUM DEFLECTION, BENDING MOMENT AND SHEAR FORCE OF NONLINEAR BEAM ON LINEAR FOUNDATION FOR VARIOUS VALUES OF N_E ELEMENTS

	Present study			[28] (h/L=0.4)
	N_e=5	N_e=15	N_e=25	
W_{max}(m)	1.88 x10^{-5}	1.964x10^{-5}	1.997 x10^{-5}	2.018 x10^{-5}
M_{max}(kN.m)	11.81	11.95	11.98	12.01
SF_{max} (kN)	19.15	22.35	22.99	23.02

TABLE III
MAXIMUM DEFLECTION OF NONLINEAR BEAM ON LINEAR AND NONLINEAR SOIL FOR VARIOUS VALUES OF BEAM LENGTH AND EXTERNAL LOAD

W_{max} (m)	L=2m (N_e=25)			L=9m (N_e=25)			L=15m (N_e=25)		
	P=25 (kN/m)	P=125 (kN/m)	P=250 (kN/m)	P=25 (kN/m)	P=125 (kN/m)	P=250 (kN/m)	P=25 (kN/m)	P=125 (kN/m)	P=250 (kN/m)
Nonlinear beam on linear soil	1.997 x10^{-5}	0.1026 x10^{-3}	0.2053x10^{-3}	3.905 x10^{-3}	20.32 x10^{-3}	40.51 x10^{-3}	6.584 x10^{-3}	0.0342	0.0683
Nonlinear beam on nonlinear soil	1.998 x10^{-5}	0.1029x10^{-3}	0.2045x10^{-3}	7.043 x10^{-3}	41.19 x10^{-3}	81.12 x10^{-3}	56.47 x10^{-3}	0.246	0.3776

TABLE IV
MAXIMUM BENDING MOMENT OF NONLINEAR BEAM ON LINEAR AND NONLINEAR SOIL FOR VARIOUS VALUES OF BEAM LENGTH AND EXTERNAL LOAD

M_{max} (kN.m)	L=2m (N_e=25)			L=9m (N_e=25)			L=15m (N_e=25)		
	P=25 (kN/m)	P=125 (kN/m)	P=250 (kN/m)	P=25 (kN/m)	P=125 (kN/m)	P=250 (kN/m)	P=25 (kN/m)	P=125 (kN/m)	P=250 (kN/m)
Nonlinear beam on linear soil	11.98	62.30	124.6	113.6	591.2	1179	65.59	341.4	681.1
Nonlinear beam on nonlinear soil	11.99	62.40	125	222.2	1234	2430	607.7	2644	4020

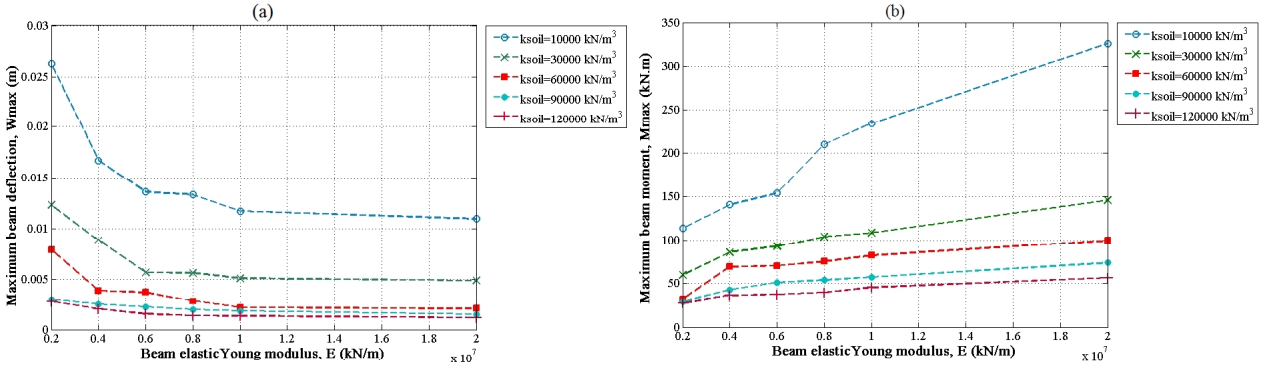

Fig. 3 Effect of the variation of the Young modulus of the beam and the coefficient of subgrade reaction of the soil on the beam response, (a) Maximum deflection of the beam, (b) Maximum bending moment of the beam

TABLE V
COMPARISON OF THE MAXIMUM DEFLECTIONS OF NONLINEAR BEAM RESTING ON NONLINEAR SOIL, OBTAINED BY DETERMINISTIC AND PROBABILISTIC ANALYSIS WITH A PROBABILITY OF 80% FOR DIFFERENT VALUES OF THE COEFFICIENT OF VARIATION CV (%)

Maximum deflection (m) (deterministic analysis)	Maximum deflection (m) (Probabilistic analysis with Lc=6m)		
	Cv = 50 %	Cv = 70 %	Cv = 100 %
7.043 x10^{-3}	7.681 x10^{-3}	8.796 x10^{-3}	1.01 x10^{-3}

B. Probabilistic Analysis

The example of a nonlinear beam of length L= 9m subjected to a distributed load p=25 kN/m and resting on nonlinear soil is considered in this analysis.

Fig. 3 shows the plot of the maximum beam deflection and bending moment for different values of the Young modulus of the beam and the coefficient of subgrade reaction of the soil with Cv=70% and Lc=6m.

The results reveal that the maximum deflection and bending moment increase as the Young modulus of the beam and the coefficient of subgrade reaction of soil decrease. In fact, when the beam and the soil are less stiff, the beam undergoes moderately large deflections. Moreover, a cumulative probability function was plotted for different coefficients of variation (Cv=50%,70%,100%) and correlation length (2m,4m and 6m) as shown in Fig. 4. It can be observed that there is an increase in the maximum deflection and bending moment of the maximum beam deflection when the coefficient of variation and corelation length of the random k_{soil} increase. It is observed also that the response of the beam is more sensitive to the changes in Cv than to L_c. Therefore, Table V shows the accuracy of the probabilistic analysis for the range of coefficient of variation Cv considered and resume the values of the maximum deflections obtained from

deterministic and probabilistic analysis. From Table V, it can be see the real influence of the coefficient of variation on the response of the beam. In fact, with the increasing coefficient of variation there is an increase in the maximum deflection which largely exceeds the maximum deflection obtained by the deterministic analysis.

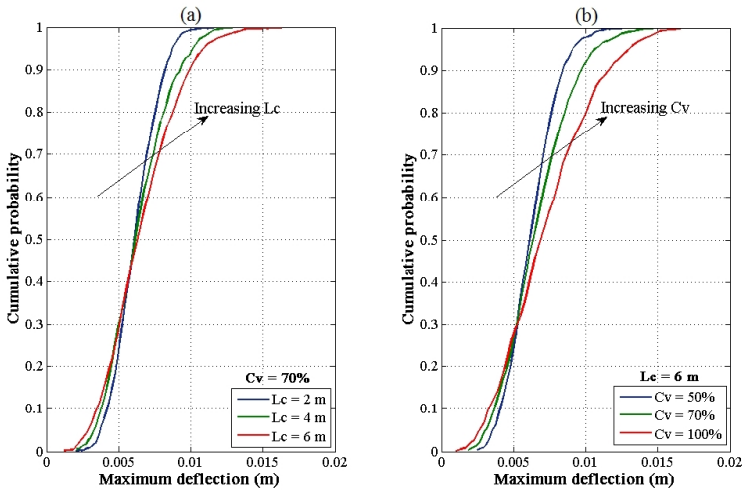

Fig. 4 Cumulative distribution function for 1000 random realizations of maximum beam response, (a) Maximum beam deflection with Cv constant and L_c variable, (b) Maximum beam deflection with Cv variable and L_c constant

As an illustration of the probabilistic results, 20 curves of deflection, bending moment and shear force randomly selected from a 1000 realizations for Cv=0.5% and L_c=6m are shown in Figs. 5 (a), (b), (c) respectively. From those figures, it can be observed that for the probabilistic analysis, the maximum deflection, bending moment and shear force are about 40%, 60% and 90% respectively compared with those obtained by the deterministic analysis.

V. Conclusion

The response of a beam subjected to a distributed load was investigated by modeling the beam as a geometrically nonlinear structure resting on elastic and elastic perfectly plastic foundation. For the lager displacement analysis of the Euler-Bernoulli beam, the theory of von Kàrmàn is proposed and the Newton-Raphson method is used to solve the nonlinear equation of the soil-beam interaction system. In the probabilistic analysis, the theory of the local average combined to the Monte Carlo simulations is used to determine the real response of the beam. However, the conclusions that can be drawn from this study are:

(1) Accurate results are obtained using a great number of beam elements (N_e).
(2) The modeling of the geometric nonlinear beam on elastic perfectly plastic soil is more appropriate than modeling it resting on elastic foundation.
(3) The beam with considerable length and subjected to the incremental distributed load is significantly affected by the soil nonlinearity and the influence of both the Young modulus of the beam and the coefficient of subgrade reaction of the soil is confirmed.
(4) The probabilistic analysis shows that the spatial variability of soil properties as the coefficient of variation and the correlation length have a dominant effect on the estimation of the beam deflection. Therefore, it can be seen that the proposed model is capable of giving accurate results by using the probabilistic approach where this analysis confirms the validity and the efficiency of the proposed model. Furthermore, this work indicates that geometric nonlinearity, soil nonlinearity and spatial variability all contribute to the response of a foundation beam under a distributed load.

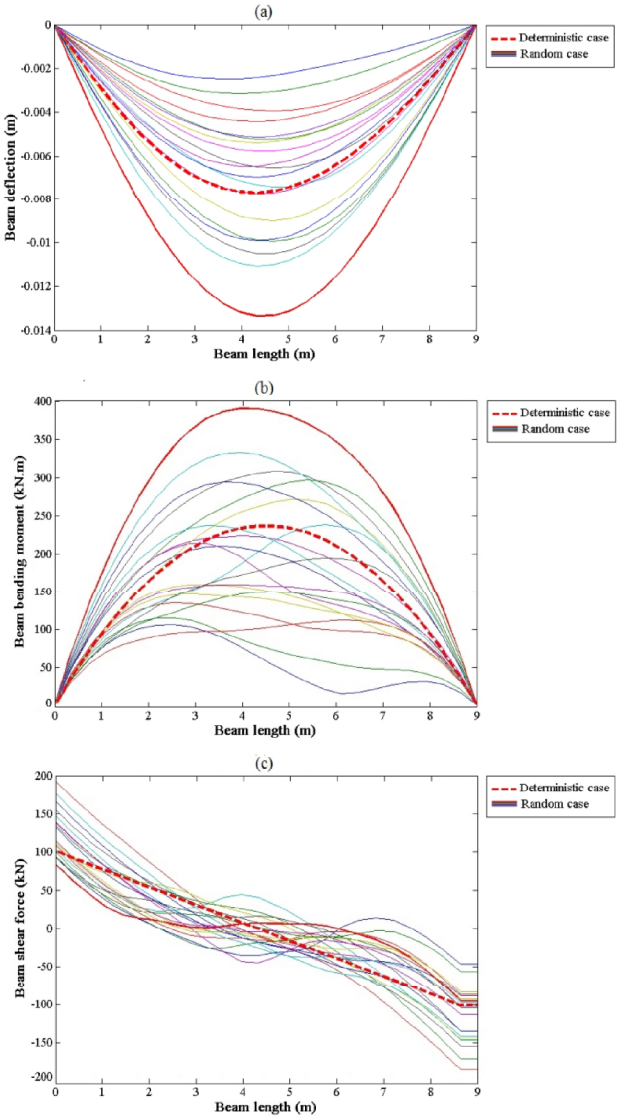

Fig. 5 Response of the beam on foundation by using deterministic and probabilistic analysis with 20 curves randomly selected, (a) Deflection of the beam, (b) Bending moment of the beam, (c) Shear force of the beam

REFERENCES

[1] Hetenyi, *Beams on elastic foundations*. Ann Arbor, MI: University of Michigan Press, USA, 1961.

[2] S. Timoshenko, *Strength of Materials, Part II, Advanced Theory and Problems*. 3rd ed., Princeton, NJ: Van Nostrand, USA, 1956.

[3] S. Motohiro, K. Shunji and M. Takashi, "Structural modeling of beams on elastic foundations with elasticity couplings," *Mechanics Research Communications*, vol. 34, no. 5-6, pp. 451-459, 2007.

[4] C. Miranda and K. Nair, "Finite beams on elastic foundation," *ASCE Journal of Structure Division*, vol. 92, no. ST2, Paper 4778, pp. 131-142, 1966.

[5] M. Eisenberger and J. Clastornik, "Beams on variable two-parameter elastic foundation," *Journal of Engineering Mechanics*, vol. 113, no. 10, pp. 1454-1466, 1987.

[6] B. Y. Ting and E. F. Mockry, "Beam on elastic foundation finite elements," *Journal of Structural Engineering*, vol. 110, no. 10, pp. 2324-2339, 1984.

[7] E. Winkler," *Die Lehre von der Elasticitaet und Festigkeit (The theory of elasticity and strength),*" Dominicus: Prag, 1867.

[8] M. Eisenberger and D. Z. Yankelevsky, "Exact stiffness matrix for beams on elastic foundation," *Computers and Structures*, vol. 21, no. 6, pp. 1355-1359, 1985.

[9] D. Z. Yankelevsky, M. Eisenberger and M. A. Adin, "Analysis of beams on nonlinear Winkler foundation," *Computers and Structures,* vol. 31, no. 2, pp. 287-292, 1989.

[10] J. P. Beaufait and W. Hoadley, "Analysis of elastic beams on nonlinear foundations," *Computers and Structures*, vol. 12, no. 5, pp. 669-676, 1980.

[11] C. W. Harden and T. C. Hutchinson, "Beam on nonlinear Winkler foundation modeling of shallow rocking-dominated footings," *Earthquake Spectra*, vol. 25, no. 2, pp. 277-300, 2009.

[12] S. P. Sharma and S. Dasgupta, "The bending problem of axially constrained beams on nonlinear elastic foundations," *International Journal of Solids and Structures*, vol. 11, pp. 853-889, 1975.

[13] T. M. Wang and L. W. Gagnon, "Vibrations of continuous Timoshenko beams on Winkler-Pasternak foundations," *Journal of Sound and Vibration*, vol. 59, no. 2, pp. 211-220, 1978.

[14] F. Fırat Çalım, "Dynamic analysis of beams on viscoelastic foundation," *European Journal of Mechanics-A/Solids*, vol. 28, no. 3, pp. 469-476, 2009.

[15] C. Bridge and N. Willis, "Steel catenary risers results and conclusions from large-scale simulations of seabed interactions," *Proceedings of the International Conference on Deep Offshore Technology*, New Orleans, Louisiana, (2002).

[16] C. Bridge, K. Laver, E. Clukey and T. Evans, "Steel catenary riser touchdown point vertical interaction models," *Proceedings of the Conference on Offshore Technology*, Houston, Texas, 2004.

[17] M. S. Hodder and B. W. Byrne, "3D experiments investigating the interaction of a model SCR with the seabed," *Applied Ocean Research,* vol. 32, no. 2, pp. 146–157, 2010.

[18] K. J. Bathe, "*Finite element procedures in engineering analysis*," Englewood Cliffs, NJ: Prentice-Hall, 1982.

[19] J. N. Reddy, "An introduction to nonlinear finite element analysis," Oxford University Press, 2004.

[20] S. A. Hosseini Kordkheili and H. Bahai, "Non-linear finite element analysis of flexible risers in presence of buoyancy force and seabed interaction boundary condition," *Archive of Applied Mechanics,* vol. 78, no. 10, pp. 765–774, 2008.

[21] S. A. Hosseini Kordkheili, H. Bahai and M. Mirtaheri, "An updated Lagrangian finite element formulation for large displacement dynamic analysis of three-dimensional flexible riser structures," *Ocean Engineering*, vol. 38, no. 5-6, pp. 793-803, 2011.

[22] T. Horibe, "An analysis for large deflection problems of beams on elastic foundations by boundary integral equation method," *Transaction of Japan Society of Mechanical Engineers (JSME)-Part A*, vol. 53, no. 487, pp. 622-629, 1987.

[23] T. S. Jang, H. S. Baek and J. K. Paik, "A new method for the nonlinear deflection analysis of an infinite beam resting on a nonlinear elastic foundation," *International Journal of Non-Linear Mechanics,* vol. 46, no. 1, pp. 339–346, 2011.

[24] T. S. Jang, "A new semi-analytical approach to large deflections of Bernoulli–Euler-v. Karman beams on a linear elastic foundation: Nonlinear analysis of infinite beams," *International Journal of Mechanical Sciences,* vol. 66, pp. 22–32, 2013.

[25] T. S. Jang, "A general method for analysing moderately large deflections of a non-uniform beam: an infinite Bernoulli–Euler–von Kármán beam on a nonlinear elastic foundation," *Acta Mechanica,* vol. 225, no. 7, pp. 1967-1984, 2014.

[26] A. A. Al- Azzawi, H. Mahdy and O. Sh. Farhan, "Finite element analysis of deep beams on nonlinear elastic foundations," *Journal of the Serbian Society for Computational Mechanics*, vol. 4, no. 2, pp. 13-42, 2010.

[27] D. M. Al-Talaqany, "*Large Deflection Deep Beams on Elastic Foundations*," M.Sc.Thesis, Faculty of Engineering, Nahrain University of Baghdad, Iraq, 2007.

[28] A. A. Al- Azzawi and D. M. Theeban, "Large deflection of deep beams on Elastic Foundations," *Journal of the Serbian Society for Computational Mechanics*, vol. 4 no. 1, pp. 88-101, 2010.

[29] D. V. Griffiths, J. Paiboon, J. Huang, G. A. Fenton, "Numerical analysis of beams on random elastic foundations," In: Proceedings of the 9th international congress on numerical methods in engineering and scientific applications, CIMENICS, pp. 19–25, 2008.

[30] S. M. Elachachi, D. Breysse and L. Houy, "Longitudinal variability of soils and structural response of sewer networks," *Computers and Geotechnics,* vol. 31, no. 8, pp. 625–641, 2004.
[31] E. VanMarcke, "*Random fields: Analysis and synthesis*," Cambridge, MA: MIT Press, 1983.
[32] D. Nedjar, M. Bensafi, S. M. Elachachi, M. Hamane and D. Breysse, "Buried pipe response under seismic solicitation with soil–pipe interaction," *In Mestat (Ed.), NUMGE conference Paris: ENPC/ LCPC*, pp. 1047–1053, 2002.
[33] D. Nedjar, M. Hamane, M. Bensafi, S. M. Elachachi and D. Breysse, "Seismic response analysis of pipes by a probabilistic approach," *Soil Dynamics and Earthquake Engineering,* vol. 27, no. 2, pp. 111–115, 2007.
[34] S. M. Elachachi, D. Breysse and H. Benzeguir, "Soil spatial variability and structural reliability of buried networks subjected to earthquakes", *Computational Methods in Applied Sciences,* vol. 22, pp. 111–127, 2011.
[35] S. M. Elachachi, D. Breysse and A. Denis, "Effect of soil spatial variability on reliability of rigid buried pipes," *Computers and Geotechnics*, vol. 43, pp. 61–71, 2012.
[36] N. Kazi Tani, D. Nedjar and M. Hamane, "Non-linear analysis of the behaviour of buried structures in random media," *European Journal of Environmental and Civil Engineering,* vol. 17, no. 9, pp. 791-801, 2013.
[37] G. A. Fenton and E. H. VanMarcke, "Simulation of random fields via local average subdivision," *Journal of Engineering Mechanics,* vol. 116, no. 8, pp.733–1749, 1990.