International Journal of Information, Control and Computer Sciences
ISSN: 2517-9942
Vol:1, No:11, 2007

Advanced Robust PDC Fuzzy Control of Nonlinear Systems

M. Polanský

***Abstract* –** This paper introduces a new method called ARPDC (Advanced Robust Parallel Distributed Compensation) for automatic control of nonlinear systems. This method improves a quality of robust control by interpolating of robust and optimal controller. The weight of each controller is determined by an original criteria function for model validity and disturbance appreciation.
ARPDC method is based on nonlinear Takagi-Sugeno (T-S) fuzzy systems and Parallel Distributed Compensation (PDC) control scheme. The relaxed stability conditions of ARPDC control of nominal system have been derived. The advantages of presented method are demonstrated on the inverse pendulum benchmark problem. From comparison between three different controllers (robust, optimal and ARPDC) follows, that ARPDC control is almost optimal with the robustness close to the robust controller. The results indicate that ARPDC algorithm can be a good alternative not only for a robust control, but in some cases also to an adaptive control of nonlinear systems.

***Keywords* –** Robust control, optimal control, Takagi–Sugeno (TS) fuzzy models, linear matrix inequality (LMI), observer, Advanced Robust Parallel Distributed Compensation (ARPDC)

I. Introduction

DIFFERENT design techniques were developed for modelling and control of nonlinear uncertain systems. Very interesting approach was done in the fuzzy modelling and control, especially with Takagi-Sugeno (T-S) fuzzy modelling [6] and related Parallel Distributed Compensation (PDC) control algorithm [5]. Decision fuzzy variables are designed to divide the state space of the system into areas, where the linear local models describe the nonlinear system. In the over-lapped parts of these areas, local models and associated controllers are interpolated according to fuzzy membership functions. T-S model based PDC control of nonlinear systems is quite popular now for its simple and effective design based usually on Linear Matrix Inequalities (LMIs).

The robustness of the controller is very important property if model parameters are uncertain or change in time. Some robust control techniques for systems described by Takagi-Sugeno fuzzy model were published. A drawback of robust controller is that it is usually slower than the controller that is optimally designed for an exact model of the system and work on it. Presented method eliminates this drawback and increases the quality of robust control by interpolating of a robust and an optimal controller according to some fuzzy rules. Stability conditions of an overall system are based on Lyapunov theory and can be proven by prescribed LMIs.

The criteria function for model validity and disturbance appreciation is also presented here. By setting of some parameters it allows us to lay accent either on the robustness or on the quality of control process.

The inverted pendulum control system is adopted to show the performance and robustness of the new method and compare it with optimal and robust controller. Very promising results have been acquired, especially in the case of input disturbance, where the control is almost optimal and noise attenuation is same as with robust controller.

Michal Polanský is with the Department of Control and Instumentation,
Faculty of Electrical Engineering and Communication,
Brno University of Technology, Kolejní 4, 612 00 Brno, Czech Republic
(tel.: +420 5 41141128, fax : +420 5 41141123
e-mail : polansky@feec.vutbr.cz)

II. Takagi-Sugeno Fuzzy Modelling and Control of Nonlinear Systems

A. T-S model

The standard Takagi-Sugeno fuzzy model consists of the set of fuzzy rules with linear consequent, that describe system in local areas ***i***. For our purpose we suppose following form:

Rule i:

IF $z_1(t)$ is M_1^i and $z_2(t)$ is M_2^i and … and $z_n(t)$ is M_n^i

THEN $\dot{\mathbf{x}}(t)=\mathbf{A}_i\mathbf{x}(t)+\mathbf{B}_{1i}\mathbf{w}(t)+\mathbf{B}_{2i}\mathbf{u}(t)$,

$$\mathbf{y}(t)=\mathbf{C}_i\mathbf{x}(t) \tag{1}$$

where $\mathbf{z}^T(t)=[z_1(t),...,z_n(t)]$ are some premise variables,

$\mathbf{y}^T(t)=[y_1(t),...,y_l(t)]$ is an output vector,

$\mathbf{x}^T(t)=[x_1(t),...,x_n(t)]$ is a state vector,

$\mathbf{u}^T(t)=[u_1(t),...,u_m(t)]$ is a control input vector and

$\mathbf{w}^T(t)=[w_1(t),...,w_p(t)]$ is a disturbance vector.

$i = 1,2,\ldots,r$ denotes the area's number. r is the number of areas and thus also of fuzzy rules. M_j^i is a fuzzy set ($M_j^i(\mathbf{z}(t))$ is the grade of membership of premise variable $z_j(t)$ in the area number i). m is the number of inputs and l is the number of outputs of T-S fuzzy system. Matrixes $\mathbf{A}_i \in R^{n\times n}$, $\mathbf{B}_{1i} \in R^{n\times m}$, $\mathbf{B}_{2i} \in R^{n\times m}$, $\mathbf{C}_i \in R^{l\times n}$ describe the system in the area number i.

The defuzzified output can be then represented as follows:

$$\dot{\mathbf{x}}(t)=\sum_{i=1}^{r}h_i(\mathbf{z}(t))[\mathbf{A}_i\mathbf{x}(t)+\mathbf{B}_{1i}\mathbf{w}(t)+\mathbf{B}_{2i}\mathbf{u}(t)\}$$
$$\mathbf{y}(t)=\sum_{i=1}^{r}h_i(\mathbf{z}(t))\mathbf{C}_i\mathbf{x}(t) \tag{2}$$

where
$$h_i(\mathbf{z}(t))=\frac{\prod_{j=1}^{n}M_j^i(z_j(t))}{\sum_{i=1}^{r}\prod_{j=1}^{n}M_j^i(z_j(t))} \tag{3}$$

If $\mathbf{z}(t)$ is in specified range, then $\sum_{i=1}^{r}h_i(\mathbf{z}(t))=1$

This representation of defuzzified model can be easily implemented into Matlab model.

B. Fuzzy State Observer

Here we can suppose, that the disturbance signal is not measured. Fuzzy state observer is then described by similar fuzzy rules:

IF $z_1(t)$ is M_1^i and $z_2(t)$ is M_2^i and … and $z_n(t)$ is M_n^i

THEN $\dot{\hat{\mathbf{x}}}(t)=\mathbf{A}_i\hat{\mathbf{x}}(t)+\mathbf{B}_{2i}\mathbf{u}(t)+\mathbf{G}_i[\mathbf{y}(t)-\hat{\mathbf{y}}(t)]$,

$$\hat{\mathbf{y}}(t)=\mathbf{C}_i\hat{\mathbf{x}}(t), \tag{4}$$

where $\mathbf{G}_i$ is an observer gain in the area number i.

$\hat{\mathbf{x}}^T(t)=[\hat{x}_1(t),...,\hat{x}_n(t)]$ is estimated state vector and

$\hat{\mathbf{y}}^T(t)=[\hat{y}_1(t),...,\hat{y}_l(t)]$ is a vector of estimated outputs.

After defuzzyfication we get the following equations:

$$\dot{\hat{\mathbf{x}}}(t)=\sum_{i=1}^{r}h_i(\mathbf{z}(t))\{\mathbf{A}_i\hat{\mathbf{x}}(t)+\mathbf{B}_{2i}\mathbf{u}(t)+\mathbf{G}_i[\mathbf{y}(t)-\hat{\mathbf{y}}(t)]\},$$
$$\hat{\mathbf{y}}(t)=\sum_{i=1}^{r}h_i(\mathbf{z}(t))\mathbf{C}_i\hat{\mathbf{x}}(t). \tag{5}$$

C. PDC Fuzzy Control Algorithm

The control signal of PDC controller is computed as

$$\mathbf{u}(t)=-\sum_{i=1}^{r}h_i(\mathbf{z}(t))\mathbf{K}_i\mathbf{x}(t) \tag{6}$$

where $\mathbf{K}_i\in R^{m\times n}$ is a constant feedback gain.

If some state variables have to be estimated by fuzzy observer, then the control output is computed in the following way:

$$\mathbf{u}(t)=-\sum_{i=1}^{r}h_i(\mathbf{z}(t))\mathbf{K}_i\hat{\mathbf{x}}(t) \tag{7}$$

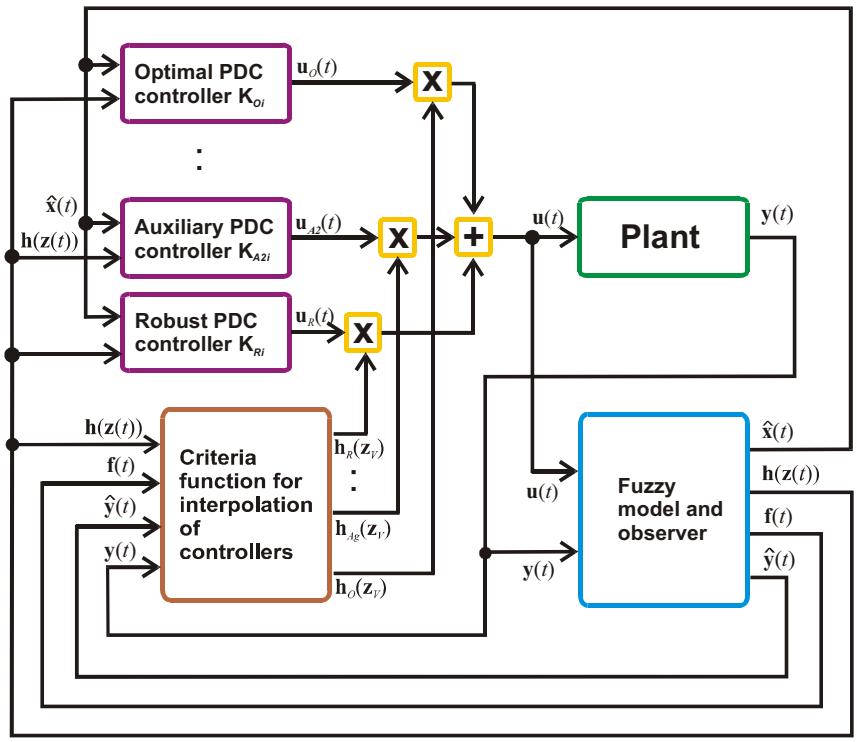

Fig. 1 Closed loop with ARPDC control algorithm

IV. Advanced Robust Parallel Distributed Compensation

The basic idea of this method is to increase quality of robust control by interpolation of robust and optimal controller. The interpolation algorithm uses the same principles, as the PDC control, only it interpolates the whole PDC controllers. It is on the figure 1. The robustness is in the sense of H_∞ norm, that determine disturbance attenuation of the control system. The optimal controller is designed to minimize prescribed integral criterion, where we can express required ratio between speed and energy consumption. Auxiliary controllers are used to maintain monotonic change of these properties during interpolation.

In the following $\mathbf{K}_{Agi}$ denotes the gain of controller number g, $g=1,..,\chi$ in the area i, $i=1,...,r$. χ is a number of controllers. Let's $\mathbf{K}_{A1i}=\mathbf{K}_{Ri}$ and $\mathbf{K}_{A\chi i}=\mathbf{K}_{Oi}$ be the gain of robust and optimal PDC controller respectively. During control we will interpolate robust PDC controller $\mathbf{K}_{A1i}=\mathbf{K}_{Ri}$ with $\mathbf{K}_{A2i}$, that either the optimal or the first auxiliary controller. Then $\mathbf{K}_{A2i}$ with $\mathbf{K}_{A3i}$ and so on.

The overall control output is computed as

$$\mathbf{u}(t)=\sum_{g=1}^{\chi} h_{Ag}(\mathbf{z}_V(t))\sum_{i=1}^{r} h_i(\mathbf{z}(t))\mathbf{K}_{Agi}\mathbf{x}(t) \tag{8}$$

where weighting functions $h_i(\mathbf{z}(t))$ are taken from the T-S model (2). Weighting functions $h_{Ag}(\mathbf{z}_V(t))$ are derived in the criteria function for model validity and disturbance appreciation. This computation must guarantee, that

$$h_{Ag}(\mathbf{z}_V(t))>0\,, \tag{9}$$

$$\sum_{g=1}^{\chi} h_{Ag}(\mathbf{z}_V(t))=1\,. \tag{10}$$

For better insight denote the weight of robust and optimal PDC controller as:

$$h_R(\mathbf{z}_V(t))=h_{A1}(\mathbf{z}_V(t)) \text{ a } h_O(\mathbf{z}_V(t))=h_{A\chi}(\mathbf{z}_V(t))\,. \tag{11}$$

V. Criteria Function for Model Validity and Disturbance Appreciation

Our aim is to estimate quality of a T-S model and level of disturbance signals. For this we will define two signals:

$$\mathbf{f}_m(t)=\sum_{i=1}^{r} h_i(\mathbf{z}(t))\left[\mathbf{A}_i\hat{\mathbf{x}}(t)+\mathbf{B}_{2i}\mathbf{u}(t)\right] \tag{12}$$

$$\mathbf{c}(t)=\sum_{i=1}^{r} h_i(\mathbf{z}(t))\mathbf{G}_i\left|\mathbf{y}(t)-\hat{\mathbf{y}}(t)\right| \tag{13}$$

Both signals $\mathbf{f}_m(t)$ and $\mathbf{c}(t)$ can be easily compared. Signal $\mathbf{f}_m(t)$ corresponds to estimated time derivative of the state variables of T-S model and $\mathbf{c}(t)$ determines absolute value of the estimation error multiplied by the observer gain. Signals $\mathbf{c}^T(t)=\left[c_1(t),...,c_n(t)\right]$ and $\mathbf{f}_m^T(t)=\left[f_{m1}(t),...,f_{mn}(t)\right]$ are used for computation of decision variable $z_V(t)$.

$$\dot{z}_V(t)=\frac{1}{T_d}\left(-z_V(t)+\frac{1}{n}\sum_{i=1}^{n}\frac{k_{ci}c_i^{\beta}(t)}{\left|f_{mi}(t)\right|+k_{ci}c_i^{\beta}(t)+k_m}\right) \tag{14}$$

where k_{ci}, $i=1,...,n$ are positive real coefficients, that allow us to lay accent either on the robustness or quality of the control process. By the exponent β we can increase sensitivity to disturbance, that can speed up setting of the robust controller. The constant $0<k_m<<1$ only ensure, that there wont be division by zero, when $\left|f_{mi}(t)\right|+k_{ci}c_i^{\beta}(t)=0$.

The low pass filter with time constant T_d is introduced to increase continuity and prevent an algebraic loop.

Normally the weight of robust controller $h_R(\mathbf{z}_V(t))=\mathbf{z}_V(t)$.

VI. Stability Analysis

Theorem 1: Equilibrium of a T-S fuzzy system with ARPDC control (8) with standard fuzzy partition (SFP) is asymptotically stable in large, if there exists a common matrix $\mathbf{P}_k > 0$, symmetric matrix $\mathbf{Q}_{kiAgi}$ and matrices $\mathbf{Q}_{kiAgj}=\mathbf{Q}_{kjAgi}^T$, $g=1,..,\chi$ for each MORG S_k, $k=1,2,...,q$ such that

$$\mathbf{F}_{iAgi}^T\mathbf{P}_k+\mathbf{P}_k\mathbf{F}_{iAgi}<\mathbf{Q}_{kiAgi}\,,\ i\in l_k,\qquad k=1,...,q \tag{15}$$

$$\left(\mathbf{F}_{iAgj}+\mathbf{F}_{jAgi}\right)^T\mathbf{P}_k+\mathbf{P}_k\left(\mathbf{F}_{iAgj}+\mathbf{F}_{jAgi}\right)\le\mathbf{Q}_{kiAgj}+\mathbf{Q}_{kiAgj}^T\,,\ i,j\in l_k \tag{16}$$

$$\begin{matrix}[\mathbf{Q}_{kiA1j}]_{r\times r}\le-\varepsilon_{kA1}\mathbf{I}<0\\ \vdots\quad\vdots\quad\vdots\\ [\mathbf{Q}_{kiA\chi j}]_{r\times r}\le-\varepsilon_{kA\chi}\mathbf{I}<0\end{matrix}\,,\quad \varepsilon_{kAg}>0 \tag{17}$$

where $\mathbf{F}_{iAgj}=\mathbf{A}_i+\mathbf{B}_i\mathbf{K}_{Agj}$.

The proof can be found in [3].

The positive definite matrixes $\mathbf{P}_k$, $k=1,...,q$ are related to a number q of the Most Overlapped Rules Group (MORG) areas, that are defined as the areas with the highest number of overlapped local areas in Standard Fuzzy Partition (SFP). The SFP of two dimensional state space with MORGs S_1, S_2, S_3 and S_4 is on the figure 2. The union of all MORG areas is the universum of the fuzzy system $\bigcup_{k=1}^{q} S_k=S$.

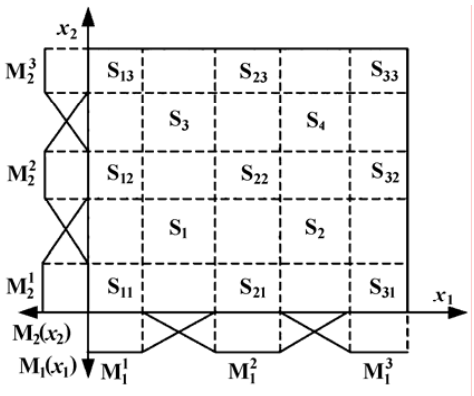

Fig. 2 Standard fuzzy partition of T-S system

$\lambda_k(\mathbf{x})$ is a characteristic function of each MORG S_k. It indicates if the working point of the state space belongs to the MORG number k. It is defined as

$$\lambda_k(\mathbf{x}(t))=\begin{cases}1, & \mathbf{x}\in S_k,\\ 0 & other,\end{cases} \quad \sum_{k=1}^{q}\lambda_k(\mathbf{x}(t))=1 \tag{18}$$

More information and definitions about SFP can be found in [5], where is also the basic version of stability conditions. Note, that the conditions with PSQ Lyapunov functions cannot be directly converted to a controller design method due to discontinuity of $V(\mathbf{x}(t))$.

From the Separation property from Ma et Sun [4] follows, that the control system with observer and PDC controller is stable, if both of them are stable separately. Since ARPDC (8) behave as a special case of PDC control, then the separation property will hold also for ARPDC control system.

VII. ARPDC Design Process

ARPDC control algorithm solve either for improving of existing robust control systems or for a new controller design, which is show in this chapter. It consists of optimal and robust controller design, observer design, simulation and setting of criteria function parameters.

A. Optimal controller design

Presented method have been published by Li, Wang, Bushnell, Hong and Tanaka in [2]. The optimization control objective is to minimize an integral criterion

$$J=\sum_{k=0}^{\infty}\left(\mathbf{y}^T(t)\mathbf{W}\mathbf{y}(t)+\mathbf{u}^T(t)\mathbf{R}\mathbf{u}(t)\right) \tag{19}$$

where $\mathbf{W}=\mathbf{W}^T>0$ determine the weight of output error and $\mathbf{R}=\mathbf{R}^T>0$ determine the weight of energy consumptions.

The method produces a sub-optimal controller, that is close to an optimal one in the case of important weight of energy consumption $\mathbf{R}$. The proof can be found in [2].

Theorem 2: Equilibrium of a T-S fuzzy system with a PDC control (6) is asymptotically stable in large, if there exists a common positive definite matrix $\mathbf{Z}>0$ and matrices $\mathbf{M}_i$, $i=1,2,...,r$ such that the following LMI conditions hold.

$$\begin{bmatrix}1 & \mathbf{x}^T(0)\\ \mathbf{x}(0) & \mathbf{Z}\end{bmatrix}\geq 0, \tag{20}$$

$$\begin{bmatrix}-\mathbf{A}_i\mathbf{Z}-\mathbf{Z}\mathbf{A}_i^T-\mathbf{B}_i\mathbf{M}_i-\mathbf{M}_i^T\mathbf{B}_i^T & \mathbf{Z}\mathbf{C}_i^T\mathbf{W}^{1/2} & \mathbf{M}_i^T\mathbf{R}^{1/2}\\ \mathbf{W}^{1/2}\mathbf{C}_i\mathbf{Z} & \gamma\mathbf{I} & 0\\ \mathbf{R}^{1/2}\mathbf{M}_i & 0 & \gamma\mathbf{I}\end{bmatrix}>0, \tag{21}$$

$$\begin{bmatrix}\Xi & \mathbf{Z}\mathbf{C}_i^T\mathbf{W}^{1/2} & \mathbf{Z}\mathbf{C}_j^T\mathbf{W}^{1/2} & \mathbf{M}_i^T\mathbf{R}^{1/2} & \mathbf{M}_j^T\mathbf{R}^{1/2}\\ \mathbf{W}^{1/2}\mathbf{C}_i\mathbf{Z} & \gamma I & 0 & 0 & 0\\ \mathbf{W}^{1/2}\mathbf{C}_j\mathbf{Z} & 0 & \gamma I & 0 & 0\\ \mathbf{R}^{1/2}\mathbf{M}_i & 0 & 0 & \gamma I & 0\\ \mathbf{R}^{1/2}\mathbf{M}_j & 0 & 0 & 0 & \gamma I\end{bmatrix}>0, \tag{22}$$

where $i=1,2,...,r$ in (21) and $1\leq i<j\leq r$ in (22),

$$\Xi=-\mathbf{A}_i\mathbf{Z}-\mathbf{A}_j\mathbf{Z}-\mathbf{Z}\mathbf{A}_i^T-\mathbf{Z}\mathbf{A}_j^T-\mathbf{B}_i\mathbf{M}_j-\mathbf{B}_j\mathbf{M}_i-\mathbf{M}_i^T\mathbf{B}_j^T-\mathbf{M}_j^T\mathbf{B}_i^T$$

The integral criterion J then will be less than γ. The sub-optimal controller gain can be computed as

$$\mathbf{K}_i=\mathbf{M}_i\mathbf{Z}^{-1} \tag{23}$$

The objective is to minimize γ.

B. Robust controller design

The method have been published by Lee, Jeung and Park in [1]. The objective is to minimize $\boldsymbol{H}_\infty$ norm, that determine a disturbance attenuation and is frequently used also as a robustness measure. The proof can be found in [1].

$$\|\mathbf{y}(t)\|_2\leq\lambda\|\mathbf{w}(t)\|_2. \tag{24}$$

The method minimizes λ, that is an upper bound of $\|\mathbf{T}_{\mathbf{yw}}\|_\infty$. It is summarised in Theorem 7.

Theorem 3: Equilibrium of a T-S fuzzy system with a PDC control (6) is asymptotically stable in large with a decay rate $\alpha>0$ and $\|\mathbf{T}_{yw}\|_\infty<\lambda$, if there exists a common positive definite matrix $\mathbf{Z}>0$, $\lambda>0$, scalar $\delta>0$ and matrices $\mathbf{M}_i$, $i=1,2,...,r$ such that the following LMI conditions hold.

$$\begin{bmatrix}\boldsymbol{\Delta}_{ii} & \mathbf{B}_{1i} & \mathbf{Z}\mathbf{C}_i^T\\ \mathbf{B}_{1i}^T & -\lambda^2\mathbf{I} & 0\\ \mathbf{C}_i\mathbf{Z} & 0 & -\mathbf{I}\end{bmatrix}\leq 0,\ i=1,2,...,r, \tag{25}$$

$$\begin{bmatrix}\boldsymbol{\Delta}_{ij}+\boldsymbol{\Delta}_{ji} & \mathbf{B}_{1i}+\mathbf{B}_{1j} & \mathbf{Z}\mathbf{C}_i^T+\mathbf{Z}\mathbf{C}_j^T\\ \mathbf{B}_{1i}^T+\mathbf{B}_{1j}^T & -2\lambda^2\mathbf{I} & 0\\ \mathbf{C}_i\mathbf{Z}+\mathbf{C}_j\mathbf{Z} & 0 & -2\mathbf{I}\end{bmatrix}\leq 0,\ 0\leq i<j\leq r, \tag{26}$$

where $\boldsymbol{\Delta}_{ij}=\mathbf{A}_i\mathbf{Z}+\mathbf{Z}\mathbf{A}_i^T+\mathbf{B}_{2i}\mathbf{M}_j+\mathbf{M}_j^T\mathbf{B}_{2i}^T+2\alpha\mathbf{Z}$,

The gain of the robust controller the will be:

$$\mathbf{K}_i=\mathbf{M}_i\mathbf{Z}^{-1} \tag{27}$$

The optimization objective is to minimize λ.

C. Observer design

An original method for fuzzy observer design is proposed here. The motivation for development of a new method is a need of fast observer with a minimal estimation error. Although the control stability is guaranteed within the universe of a fuzzy system [4], the estimation affects the integral criteria and $\boldsymbol{H}_\infty$ norm. Then it is important that poles of the observer loop are more negative than the poles of the controller loop. The design method allows setting of observer loop poles into a specified area.

$$D=\{a+jb\in C:(a+q_D)^2+b^2<r_D^2\},\quad q_D,r_D>0$$

It also introduces $\boldsymbol{H}_\infty$ norm that determines attenuation of the disturbance signal $\mathbf{w}(t)$ on the output estimation error signal $\mathbf{y}(t)-\hat{\mathbf{y}}(t)$. The proof can be found in [3].

Theorem 4: State fuzzy observer (5) maintains asymptotically stable estimation error $\mathbf{e}(t)=\mathbf{x}(t)-\hat{\mathbf{x}}(t)\to 0$, $\boldsymbol{H}_\infty$ norm $\|\mathbf{T}_{\vartheta w}\|_\infty<\lambda_e$, with poles in the area D and decay rate $\alpha>0$, if there exists matrices $\mathbf{J}_i$, $\mathbf{Q}_{ij}=\mathbf{Q}_{ji}^T$, common positive definite matrix $\mathbf{Y}$ and scalars $\lambda_e>0$ a $\alpha>0$ that the following LMIs hold.

$$\begin{bmatrix} \Phi_{ii}-\mathbf{Q}_{ii} & \mathbf{Y}\mathbf{B}_{1i} \\ \mathbf{B}_{1i}^T\mathbf{Y} & -\lambda_e^2\mathbf{I} \end{bmatrix}<0 \qquad i=1,2,...,r, \tag{28}$$

$$\begin{bmatrix} \Phi_{ij}+\Phi_{ji}-\mathbf{Q}_{ij}-\mathbf{Q}_{ij}^T & \mathbf{Y}\mathbf{B}_{1i}+\mathbf{Y}\mathbf{B}_{1j} \\ \mathbf{B}_{1i}^T\mathbf{Y}+\mathbf{B}_{1j}^T\mathbf{Y} & -2\lambda_e^2\mathbf{I} \end{bmatrix}\le 0 \quad i,j=1,...,r,\ i\neq j \tag{29}$$

$$[\mathbf{Q}_{ij}]_{r\times r}\le -\varepsilon\,\mathbf{I}<0 \qquad \varepsilon>0 \tag{30}$$

$$\begin{bmatrix} -r_D\mathbf{Y} & q_D\mathbf{Y}+\mathbf{A}_i^T\mathbf{Y}+\mathbf{C}_i^T\mathbf{J}_j^T \\ q_D\mathbf{Y}+\mathbf{Y}\mathbf{A}_i+\mathbf{J}_j\mathbf{C}_i & -r_D\mathbf{Y} \end{bmatrix}<0 \tag{31}$$

where $\Phi_{ij}=\mathbf{A}_i^T\mathbf{Y}-\mathbf{C}_j^T\mathbf{J}_i^T+\mathbf{Y}\mathbf{A}_i-\mathbf{J}_i\mathbf{C}_j+\mathbf{C}_i^T\mathbf{C}_i+2\alpha\mathbf{Y}$.

VIII. Simulation Results

Inverted pendulum have been represented by an exact mathematical model and by T-S state space model divided into three linear local areas (around angle 0, -π/3 and π/3). The state variables were x1-angle [rad], x2-angular speed [rad/s], x3-cart position [m] and x4-spee of the cart [m/s]. For this model were designed optimal and robust controller and observer such that the stability conditions of ARPDC control are satisfied. $\boldsymbol{H}_\infty$ norm and integral criterion J changes monotonically during interpolation so that auxiliary controllers wasn't necessary. The values were the following:
Robust controller: max $\boldsymbol{H}_\infty$ norm is **0.091,** J_{max} = **5193**.
Optimal controller: max $\boldsymbol{H}_\infty$ norm is **0.366**, J_{max} = **3334**.

Table I
Integral Criterion *J*, its Energy Part (*Ju*) and Output Part (*Jy*)

	ARPDC control			Optimal control			Robust control		
mul	*J*	*Ju*	*Jy*	*J*	*Ju*	*Jy*	*J*	*Ju*	*Jy*
0,6	Stable			Unstable			Unstable		
0,65	1924	1676	248				3014	2729	285
0,7	1595	1367	228				2126	1911	215
0,75	1455	1233	222	1420	1157	263	1824	1618	206
0,9	1305	1081	224	1131	895	236	1618	1390	228
1	1258	1003	255	1226	916	310	1630	1385	245
1,05	1319	1040	279	1370	976	394	1646	1393	253
1,15	1449	1126	323	2618	1571	1047	1687	1419	268
1,2	1515	1168	347	Stable			1714	1438	276
1,3	1658	1255	403	Unstable			1774	1478	296
1,4	1822	1350	472				1846	1524	322
2	4650	2835	1815				2747	2017	730
2,1	Stable						3058	2177	881
2,4							4769	3053	1716
2,5	Unstable						Stable		
3									

The control quality and robustness analysis of three systems (with the robust, optimal and ARPDC controller) was performed. The ARPDC algorithm achieved over 30% better integral criteria J than the robust controller and almost 40% smaller energy consumption during control of the nominal system from the initial conditions $\mathbf{x}(0)=\hat{\mathbf{x}}(0)=[\frac{\pi}{3}000]$. The robustness for parametric uncertainties was tested by multiplying of the system matrices $\mathbf{A}_i$ by a coefficient *mul.* Important results in the table I shows that ARPDC control quality increased in a wide range of parameter *mul* compare to the robust controller. Parametrical robustness remained at almost the same level as with the robust controller. In the ranges $mul\in(0.59;0.73)$ and $mul\in(1.03;1.42)$ are the results of ARPDC better than results of both robust and optimal controllers

Very interesting results were obtained also for systems disturbed by an input noise. A white noise of different noise power was put on inputs of all three systems. The control response with noise power 50 from initial conditions $\mathbf{x}(0)=\hat{\mathbf{x}}(0)=[\frac{\pi}{3}000]$ is shown at the fig. 3.

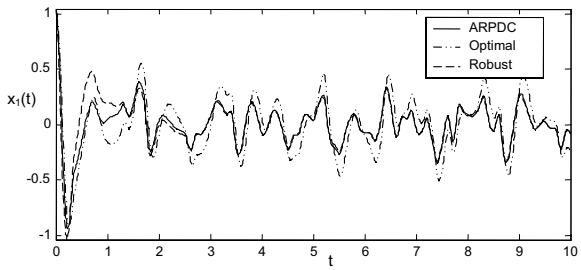

Fig. 3 Control response of all systems in the presence of disturbance

The results indicate, that ARPDC algorithm connects good properties of optimal and robust PDC control and achieve the best performance. From the initial conditions it regulates almost optimally to the equilibrium but the noise attenuation is the same as with the robust controller. The response of integral criterion J shows fig.4. For ARPDC it is small after regulation and also it increases slowly with the noise. After 8 seconds it is the same as with the optimal controller.

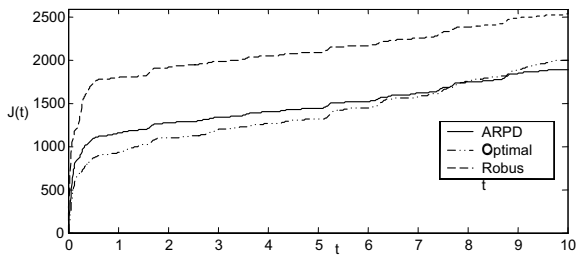

Fig. 4 Integral criterion J response of all systems in the presence of strong disturbance

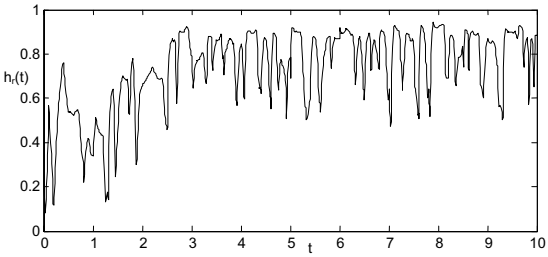

Fig. 5 Weighting function or robust controller in the presence of small disturbance

The same behaviour was obtained with a small noise power 0.1. After 10 minutes is *J* value for ARPDC again bellow the others. The weight of robust controller in this situation shows fig.5.

Table II demonstrates the difference among the integral criterions *J* of all three systems after 10 seconds. The ARPDC results are taken as 100%.

TABLE II
INTEGRAL CRITERION *J* AND ITS PARTS UNDER DISTURBANCE IN10 SEC.

	ARPDC control			Optimal control			Robust control		
noise pow.	*J*	*Ju*	*Jy*	*J*	*Ju*	*Jy*	*J*	*Ju*	*Jy*
0.1	1245	996	249	1217	906	311	1621	1380	241
	100%	100%	100%	98%	91%	125%	130%	139%	98%
50	1891	1756	135	1993	1745	248	2536	2411	125
	100%	100%	100%	105%	99%	184%	134%	137%	93%

IX. CONCLUSIONS

The ARPDC control algorithm could dramatically increase quality and reduce energy consumption of the control process. The control is almost optimal with the robustness close to the robust controller. By setting of criteria function coefficient we can lay accent either on quality or the robustness of the control process. Very important is, that all controllers and observer can be effectively numerically found by solving LMIs and the stability of overall ARPDC control system can be proved. The simulations performed above also show, that the ARPDC algorithm can be very useful in the presence of input noise of different intensity from very disturbed to a negligible noise. It performs better not only than the robust, but also than the optimal controller.

Its original idea is simple and natural so that it could became popular in many future applications.

REFERENCES

[1] K. R. Lee, E. T. Jeung, H. B. Park, "Robust fuzzy H∞ control for uncertain nonlinear systems via state feedback: an LMI approach". *Fuzzy Sets and Systems*. 2001, vol. 120, p. 123–134

[2] J. Li, O. Wang, L. Bushnell, Y. Hong, K. Tanaka, A Fuzzy Logic Approach to Optimal Control of Nonlinear Systems. *International Journal of Fuzzy Systems.* 2000*,* Vol. 2, No. 3.

[3] M. Polansky, "Nová metoda ARPDC pro zvýšení kvality robustního řízení nelineárních systémů" Dissertation thesis, Faculty of electrical engineering and Communication at Brno University of Technology, 2005, in Czech

[4] X. J. Ma, Z. Q. Sun, "Analysis and design of fuzzy controller and fuzzy observer" *IEEE Trans. Fuzzy Systems.* 1998, vol. 6, no. 1, p. 41–51.

[5] Z. H. Xiu, G. Ren, "Stability analysis and systematic design of Takagi–Sugeno fuzzy control systems" *Fuzzy Sets and Systems.* 2004, Available from www.sciencedirect.com

[6] T. Takagi, M. Sugeno, "Fuzzy identification of systems and its applications to modeling and control" *IEEE Transactions on Systems, Man and Cybernetics.* 1985, vol. 1, no. 1, p. 116–132