International Journal of Electrical, Electronic and Communication Sciences
ISSN: 2517-9438
Vol:4, No:6, 2010

RADAR Imaging to Develop an Enhanced Fog Vision System for Collision Avoidance

Saswata Chakraborty, R.P.Chatterjee, S. Majumder, Anup Kr. Bhattacharjee

***Abstract*—**The scattering effect of light in fog improves the difficulty in visibility thus introducing disturbances in transport facilities in urban or industrial areas causing fatal accidents or public harassments, therefore, developing an enhanced fog vision system with radio wave to improvise the way outs of these severe problems is really a big challenge for researchers. Series of experimental studies already been done and more are in progress to know the weather effect on radio frequencies for different ranges. According to Rayleigh scattering Law, the propagating wavelength should be greater than the diameter of the particle present in the penetrating medium. Direct wave RF signal thus have high chance of failure to work in such weather for detection of any object. Therefore an extensive study was required to find suitable region in the RF band that can help us in detecting objects with proper shape. This paper produces some results on object detection using 912 MHz band with successful detection of the persistence of any object coming under the trajectory of a vehicle navigating in indoor and outdoor environment. The developed images are finally transformed to video signal to enable continuous monitoring.

***Keywords*—**RADAR Imaging, Fog vision system, Object detection, Jpeg to Mpeg conversion

I. Introduction

OBJECT detection using radar imaging technique is necessary for detecting obstacles in foggy weather. Owing to dense fog, many trains run behind the schedule. Passengers are continuously harassed because of delay of trains. Sometimes, when the fog is very dense, accidents are caused because of trains colliding with some obstacle which was invisible to the driver because of dense fog. In December 1952, a severe air pollution event that affected United Kingdom, especially in London, known as the Great Smog or Big Smoke [1]. A period of cold weather combined with an anticyclone and windless conditions, collected airborne pollutants mostly from the use of coal to form a thick layer of smog over the city. Fog, mixed with chimney smoke, particulates (e.g. from vehicle exhausts) and other pollutants (particularly sulphur dioxide) resulted to form a persistent smog to cause major disruption due to the effect on visibility. Although London was accustomed to thick fogs, this one was denser and longer lasting than any previously seen [2]. Visibility was reduced to a few yards making driving difficult or impossible. Public transport ground to a halt – apart from the London Underground – and the ambulance service stopped running, forcing the sick to make their own way to hospital [3]. In northern India, especially in Delhi, it was recorded that fog restricts the visibility range up to 50 m till the mid of the day thus affecting the transport delay or causing accidents [4]. The typical diameter of fog droplets ranging from 0.2 to 0.3 micron obstructs the propagation of visible lights according to Rayleigh scattering law. From several experiments it is shown that mm-wave radar can give better performance in foggy weather than IR or visible light. Therefore, developing an imaging system using radar could be a great solution for these types of difficulties.

Saswata Chakraborty is with the Central Mechanical Engineering Research Institute, Durgapur, West Bengal, India, working as a Research Fellow in Supra Institutional Project-24 and pursuing PhD in NIT, Durgapur(Phone:09434646816, email:saswata.cmeri@gmail.com).

R.P.Chatterjee is with the Central Mechanical Engineering Research Institute, Durgapur, West Bengal, India, working as a Scientist, Electronics and Instrumentation Group (Phone: 03436452051, email: r_chatterjee@cmeri.res.in).

S. Majumder is with the Central Mechanical Engineering Research Institute, Durgapur, West Bengal, India, working as Scientist and Head, Surface Robotics Laboratory(Phone:03436510214, email: sjm@cmeri.res.in).

Anup K. Bhattacharjee is with National Institute of Technology, Durgapur, West Bengal, India, working as a Professor, Department of Electronics and Communication Engineering(Phone:09434788021, email:akbece12@yahoo.com).

II. Related Works

Earlier radar was being used in defence to detect enemy aircrafts. Griffiths and Baker developed a Radar Imaging technique to fight against terrorism [5]. Antoni Broquetas et.al presented a new inverse synthetic aperture radar (ISAR) algorithm intended for radar cross-section (RCS) imaging and measurement from scattered fields [6]. This method overcomes the requirement for an expensive compact range facility to produce a plane wave illumination based on a spherical-wave near-field illumination. One of the greatest problems in rescue operations during fire disasters is the blocking of firefighters' view by dense smoke. Assuming that a firefighter's most important task is to understand the situation within a smoke-filled space, Aoki and Sakai developed a way to do so, starting by scanning space using millimeter-wave radar combined with a gyrosensor [7]. Andrews et.al worked on optical-radar imaging of scale models for studies in asteroid astronomy [8]. Interest in methods for obtaining surveillance information through walls has been increasing for both domestic and military security applications. To reach this interest, Allan R. Hunt et.al developed a frequency-agile radar operating between 500 MHz and 2 GHz that was the sensor element in the networked concept [9]. Its performance has been tested on a variety of wall materials. Results of these tests show that this new radar has the capability to detect the breathing response of a

stationary individual through a reinforced concrete wall at a distance of 6.5 meters. Individuality to this work has been provided by raising its capability to detect not only the object speed or persistence but also the actual shape or image in gray scale format to deliver an NTSC/PAL compatible video signal for continuous monitoring.

The next section gives a description on Rayleigh scattering law, synthetic aperture radar (SAR) and corner reflector. Section IV explains the experimental procedure regarding radar based imaging technique followed by some results in section V. Finally a conclusion has been drawn showing the advantage of radar imaging in enhanced fog vision system.

(a)

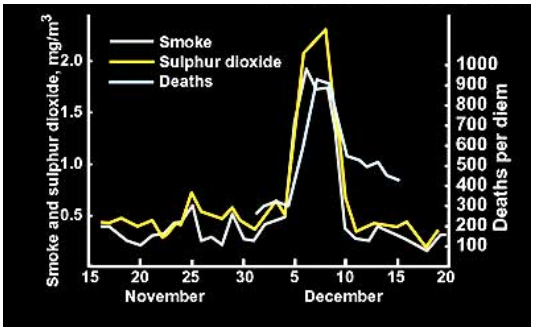

(b)

(c)

Fig. 1(a) A snapshot taken from a news report published regarding Fog in London (1952),(b)database showing the death toll due to heavy fog and smoke and (c)Obstructed visibility due to dense fog

III. THEORY

Operating frequency range for radar system varies along with the variation of fog density. There is a relation between frequency and fog density which can be described by Rayleigh scattering law. Synthetic Aperture Radar (SAR) has a wide usage in radar based system while the directivity of RF beam is heavily influenced by corner reflector. A brief description of the above is given below:

A. Rayleigh Scattering Law

According to the Rayleigh scattering law, the size of a scattering particle is parameterized by the ratio x of its characteristic dimension r and wavelength λ:

$$x = 2\pi r/\lambda \tag{1}$$

Rayleigh scattering can be defined as scattering in the small size parameter regime x << 1. Scattering from larger spherical particles is explained by the Mie theory for an arbitrary size parameter x. For small x the Mie theory reduces to the Rayleigh approximation. The amount of Rayleigh scattering that occurs for a beam of light is dependent upon the size of the particles and the wavelength of the light. Specifically, the intensity of the scattered light varies as the sixth power of the particle size and varies inversely with the fourth power of the wavelength.

The intensity I of light scattered by a single small particle from a beam of unpolarized light of wavelength λ and intensity Io is given by:

$$I = Io\frac{1+\cos^2\theta}{2R^2}\left(2\frac{\pi}{\lambda}\right)^4\left(\frac{n^2-1}{n^2+2}\right)^2\left(\frac{d}{2}\right)^2 \tag{2}$$

where, R is the distance to the particle, θ is the scattering angle, n is the refractive index of the particle, and d is the diameter of the particle.

B. Synthetic Aperture Radar (SAR)

Synthetic-aperture radar (SAR) is a form of radar in which multiple radar images are processed to yield higher-resolution images than would be possible by conventional means. Either a single antenna mounted on a moving platform (such as an airplane or spacecraft) is used to illuminate a target scene or many low-directivity small stationary antennas are scattered over an area near the target area. The many echo waveforms received at the different antenna positions are post-processed to resolve the target. SAR can only be implemented by moving one or more antennae over relatively immobile targets, by placing multiple stationary antennae over a relatively large area, or combinations thereof. SAR has seen wide applications in remote sensing and mapping.

In a typical SAR application, a single radar antenna is attached to the side of an aircraft. A single pulse from the antenna will be rather broad (several degrees) because diffraction requires a large antenna to produce a narrow beam. The pulse will also be broad in the vertical direction; often it will illuminate the terrain from directly beneath the aircraft out to the horizon. If the terrain is approximately flat, the time at

which echoes return allows points at different distances to be distinguished. Distinguishing points along the track of the aircraft is difficult with a small antenna. However, if the amplitude and phase of the signal returning from a given piece of ground are recorded, and if the aircraft emits a series of pulses as it travels, then the results from these pulses can be combined. Effectively, the series of observations can be combined just as if they had all been made simultaneously from a very large antenna; this process creates a synthetic aperture much larger than the length of the antenna (and much longer than the aircraft itself). Combining the series of observations requires significant computational resources. It is often done at a ground station after the observation is complete, using Fourier transform techniques. The high computing speed now available allows SAR processing to be done in real time onboard SAR aircraft. The result is a map of radar reflectivity (including both amplitude and phase). The phase information is, in the simplest applications, discarded. The amplitude information contains information about ground cover, in much the same way that a black-and-white picture does. Interpretation is not simple, but a large body of experimental results has been accumulated by flying test flights over known terrain.

Image resolution of SAR is mainly proportional to the radio signal bandwidth used and, to a lesser extent, on the system precision and the particular techniques used in post-processing. Early satellites provided a resolution in the tens of meters. More recent airborne systems provide resolutions to about 10 cm, ultra-wideband systems (developed and produced in the last decade) provide resolutions of a few millimeters, and experimental terahertz SAR has provided sub-millimeter resolution in the laboratory.

Before rapid computers were available, the processing stage was done using holographic techniques. This was one of the first effective analogue optical computer systems. A scale hologram interference pattern was produced directly from the analogue radar data (for example 1:1,000,000 for 0.6 meters radar). Then laser light with the same scale (in the example 0.6 micrometers) passing through the hologram would produce a terrain projection. This works because SAR is fundamentally very similar to holography with microwaves instead of light.

C. Corner Reflector:

A corner reflector is a retro reflector consisting of three mutually perpendicular, intersecting flat surfaces, which reflects electromagnetic waves back towards the source. The three intersecting surfaces often have square shapes. This is also known as a corner cube. Corner reflectors are placed on the vessel's masts at a height of at least 4.6 meters above sea level. Popular corner reflectors used on ships are (amongst others) the RORC radar reflectors, Firdel Blippers and EchoMax radar reflectors.

In optics, corner reflectors typically consist of three mirrors or reflective prisms which return an incident light beam in the opposite direction. In surveying, such prisms are commonly used as targets for long-range electronic distance measurement using a total station.

Arrays of corner reflectors are used in automobile and bicycle tail lights. Microscopic corner reflector structures can be incorporated into reflective paint for increased visibility at night, although retro reflective spherical beads are more common for this purpose.

A directional antenna using two mutually intersecting conducting flat surfaces is also considered to be a type of corner reflector.

Corner reflectors can also occur accidentally. Tower blocks with balconies are often accidental corner reflectors for sound and return a distinctive echo to an observer making a sharp noise, such as a hand clap, nearby. Similarly, in radar interpretation, an object that has multiple reflections from smooth surfaces produces a radar return of greater magnitude than might be expected from the physical size of the object. This effect was put to use on the ADM-20 Quail, a small missile which had the same radar cross section as a B-52.NASA has put several corner reflectors, known as the Lunar Laser Ranging Experiment, on the Moon for use in laser interferometer to measure the Moon's orbit more precisely than was possible before.

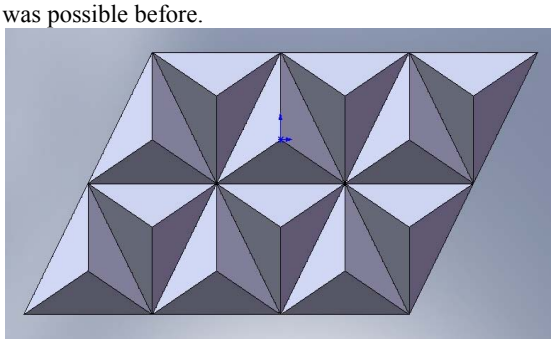

Fig. 2. Array of corner reflectors for radar testing

Such devices are often used as radar targets or markers and are often employed on ships and, especially, lifeboats; Francis Rogallo invented a target kite incorporating corner reflectors. These normally consist of three conducting metallic surfaces or screens perpendicular to one another.

IV. DETAILED DESCRIPTION

A set transceiver circuits as shown in fig3 have been designed to transmit a continuous wave in 912 MHz band to detect object in the range of 250 meter for outdoor application. Persistence of the object in the visible range is recorded and displayed in fig4. The area under the curve incorporates a number of discontinuities and those areas were marked. Indexing of the gray scale image from the received signal response is done using the equation follows:

Pixel value=255-k*(every discontinuous area)

Typically the value of ‘k’ for our experiment was taken as 42.

Fig. 4. displays the Discontinuity in the received signal response against time(s). In case of indoor navigation the power of the reflected power need to be tuned such that the multiple reflections from the wall and concrete structures cannot put effective impact on the received signal response.

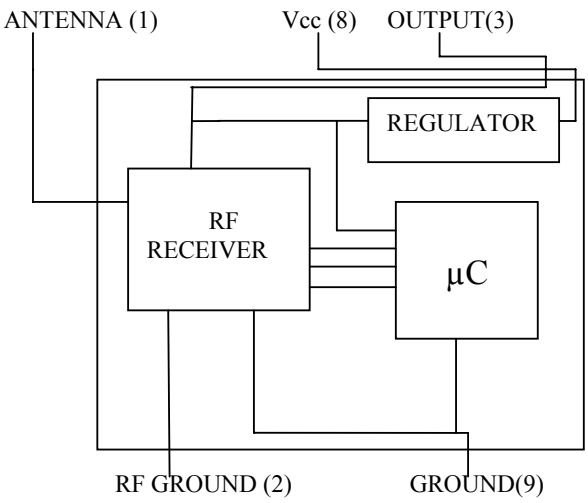

Fig. 3. Transceiver Circuits

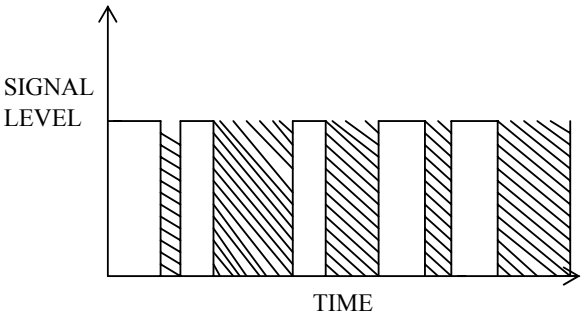

Fig. 4 Received signal vs. time

A known object was placed at a certain distance which is good reflector of Radio signal and a moving obstacle was deployed under the area of reflected wave path fig. 5 shows the arrangements made for the indoor experiment of object detection.

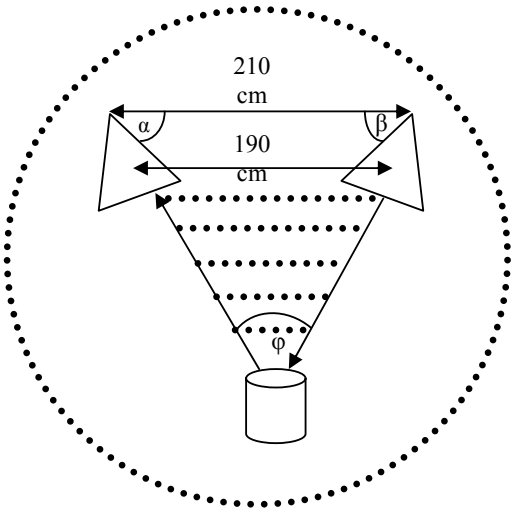

Fig. 5. Experimental setup

From fig.5 it is obvious that

$$\varphi = 180^{\circ} - 2 * \cos^{-1}(2 * d1/\sqrt{3} * d2) \quad (3)$$

where d1= distance between transmitter and receiver
d2= length of each corner reflector
for an example, d1=190 cm
we get,

$$\alpha = 70^{\circ};\ \beta = 70^{\circ};$$

Thus,

$$\varphi = 180^{\circ} - (\alpha + \beta) = 40^{\circ}$$

V. RESULT AND DISCUSSION

An imaging technique has been used which detects the presence of an object and its time of persistence. More the time the object persists in front of the radar transceiver, darker is the image. When there is no object, the image is totally white fig.6 shows the experimental imaging results of the radar transceiver experimental setup when an object is moving at different positions under the area of the reflected wave path.

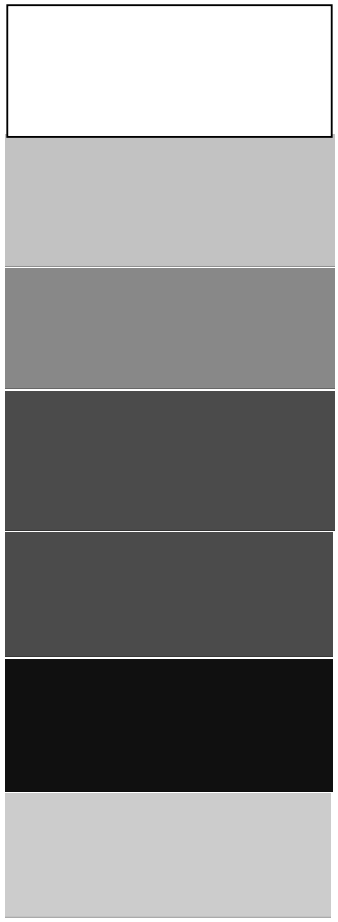

Fig. 6. Experimental result of radar imaging

From the result above we can visualize that the different

colours indicate the different time of persistence of the object in front of the radar transceiver circuit. A white colour represents the absence of any obstacle in the reflected wave path, whereas a black colour indicates that the reflected wave has completely obstructed the obstacle.

VI. CONCLUSION

Lots of study and experiments on foggy weather and its impact on radio signal have been carried out to evolve a trick for enhanced fog vision system. Transport delay, accidents, delay in flight take offs are some severe effects of this mishap. Thermal imaging was taken as an alternative to fog vision system due to the failure of light wave or IR signal in this environment. RADAR can give a better solution to the transport world to avoid delay due to foggy weather. Some prior work discussed earlier claims RADAR to be a perfect solution for indoor smoky situation. Improvement in this technique can lead us to the outdoor world with imaging facility.

ACKNOWLEDGMENT

The authors are grateful to the Director, CMERI for providing support in the research work. Finally, the authors express their gratitude to WASET for considering this paper for publication. The authors are also grateful to Sukanta Bhattacharjee for providing support in engineering modeling division.

REFERENCES

[1] Stegeman, John J. & Solow, Andrew R. A Look Back at the London Smog of 1952 and the Half Century Since; A Half Century Later: Recollections of the London Fog (Environmental Health Perspectives, Dec 2002).
[2] Greater London Authority. 50 Years On: The struggle for air quality in London since the great smog of December 1952.
[3] John Nielsen, Killer Fog of '52 Thousands Died as Poisonous Air Smothered London (National Public Radio).
[4] TOI, “Dense fog covers Delhi, Punjab, Haryana”, IANS, Jan 21, 2010, 11.29am IST
[5] Hugh D. Griffiths† and Chris J. Baker Department of Electronic and Electrical Engineering University College London, London, UK” RADAR IMAGING FOR COMBATTING TERRORISM”
[6] Antoni Broquetas , Joseph Palau, Luis Jofre , Angel Cardama “Spherical Wave Near-Field Imaging and Radar Cross-Section Measurement”.
[7] Yoshimitsu Aoki and Masaki Sakai” Human and Object Detection in smoke-filled space using millimeter wave radar based measurement”.
[8] A. K. Andrews, R. S. Hudson and D. Psaltis ”Optical-radar imaging of scale models for studies in asteroid astronomy”.
[9] Allan R. Hunt et.al, ”Image formation through walls using a distributed radar sensor network”.